Assembly Instructions & general Information

1. **Mechanical Mounting:** Attach the backplane through the mounting holes in at least every second connector position at top and bottom using M2,5 screws and isolating washers.
2. **Chassis GND:** If noise reduction shall be achieved by connecting digital GND to Chassis GND, use conductive washers instead of isolating ones. Spring washers are recommended instead of flat washers. Creepage and clearance between screw and GND are in accordance with EN60950. It is maintained by means of layout when using isolating washers.
3. **VI/O:** Check VI/O coding (blue/yellow keys on connector P1 from front) and VI/O (power) bridge on rear side, default assembly is +3.3V (yellow key at connector P1). If VI/O shall be set to 5V, change the keys and move the bridge on rear. For position of the bridge see drawing #1. The 2- and 3- slot backplanes use a V I/O cable on fastons at the side of the backplane instead of the V I/O bridge.
4. **Geographical Addressing** (GA) is set by default to start from number one from left (upper) position within the chassis. If more than one backplane shall be assembled, change of geographical addresses can be made. Cut copper links in between SMD pads to open, apply zero Ohm resistors to close. Package size shall be 0603. Position is labelled "nGA[x]" where "n" stands for slot# , and "x" for address#, see drawing #1.
5. **M66MHz Operation:** Schroff CPCI backplanes are designed in accordance with the requirements of CPCI Core Specification, Revision 3.0 (PICMG 2.0 R3.0). Up to 5 Slots 66MHz operation is possible, signal M66 is HIGH (open). Backplanes of higher slot count also fulfil the 66MHz operation requirements in terms of clock trace length and skew, but M66 is tied to GND to disable 66MHz operation by default. This link is made by a removable copper link. For test purposes it can be opened and closed again by using a zero Ohm resistor of size 0603. For position of the link see drawing #1.
6. **Hot Swap:** Schroff CPCI backplanes fulfil the requirements for Basic Hot Swap of the Hot Swap Specification PICMG 2.1 R2.0. The signal BD_SEL# is tied to GND by a removable copper link. It can be replaced by a resistor-capacitor combination, both of package size 0603. Position is labelled "nB" where "n" stands for slot# , see drawing #1.
7. **Bridging & Termination:** Backplanes of slot numbers between 4 to 7 can be bridged. Schroff has developed a very flat bridge that fits underneath rear I/O boards. In case of a 64-bit 8 slot backplane the same connectors can be used to assemble a termination board. Termination is recommended in some very few cases if strong buffers are used and only the system and adjacent slots are occupied and all others are empty. For more information pl. see Schroff Technical Note "When should 8 Slot Backplanes terminated", downloadable from www.schroff.de, "one click: 23006-868".
8. **Assembling of Power Cables:** M4 cable lugs should be used to connect the cables from the PSU to the powerbugs on the backplane. Maximum 2 cables are recommended per power bug. Please assemble the cable lugs with the flat side to the power bug to ensure the correct isolation distance between unisolated part of the power cable and unisolated parts of the backplane.

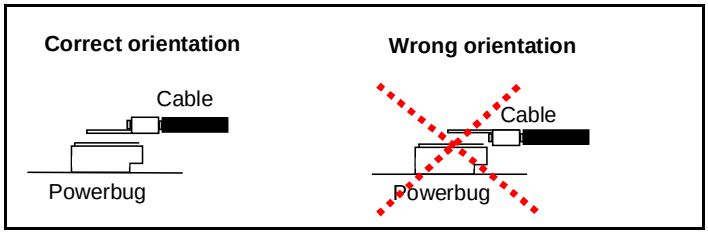

Utility / SENSE Connector pinout

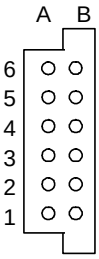

	A	B
6	nc	nc.
5	nc	-12V
4	+12V	3,3V
3	GND	+5V
2	FAL#	DEG#
1	nc	PRST#

Cable assy (350mm):
Schroff 23204 - 115

Sense
Voltage rails +5V; 3.3V; +12V and GND of these connectors are used for sense purposes. They should be connected to the backplane.
Some Power Supplies need at least a connection to GND, otherwise the outputs overrun

FAL#: Signal driven by intelligent PSU's, at least one output has failed (is out of range)

DEG#: Signal driven by intelligent PSU's, PSU indicates that the supply is beginning to derate its power output

IPMB Connector

Top view on connector

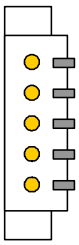

Pin	Signal
1	SCL
2	GND
3	SDA
4	Vsm
5	nc

Molex part#:
board connector: 53398-0590
free connector: 51021-0500
crimp contact: 50079-8100
(AWG 26-28, bag)

Vsm (Power) can be connected to +5V by using zero Ohm resistor of size 0603 (R100)

CPCI Backplane

Rear view, system slot right

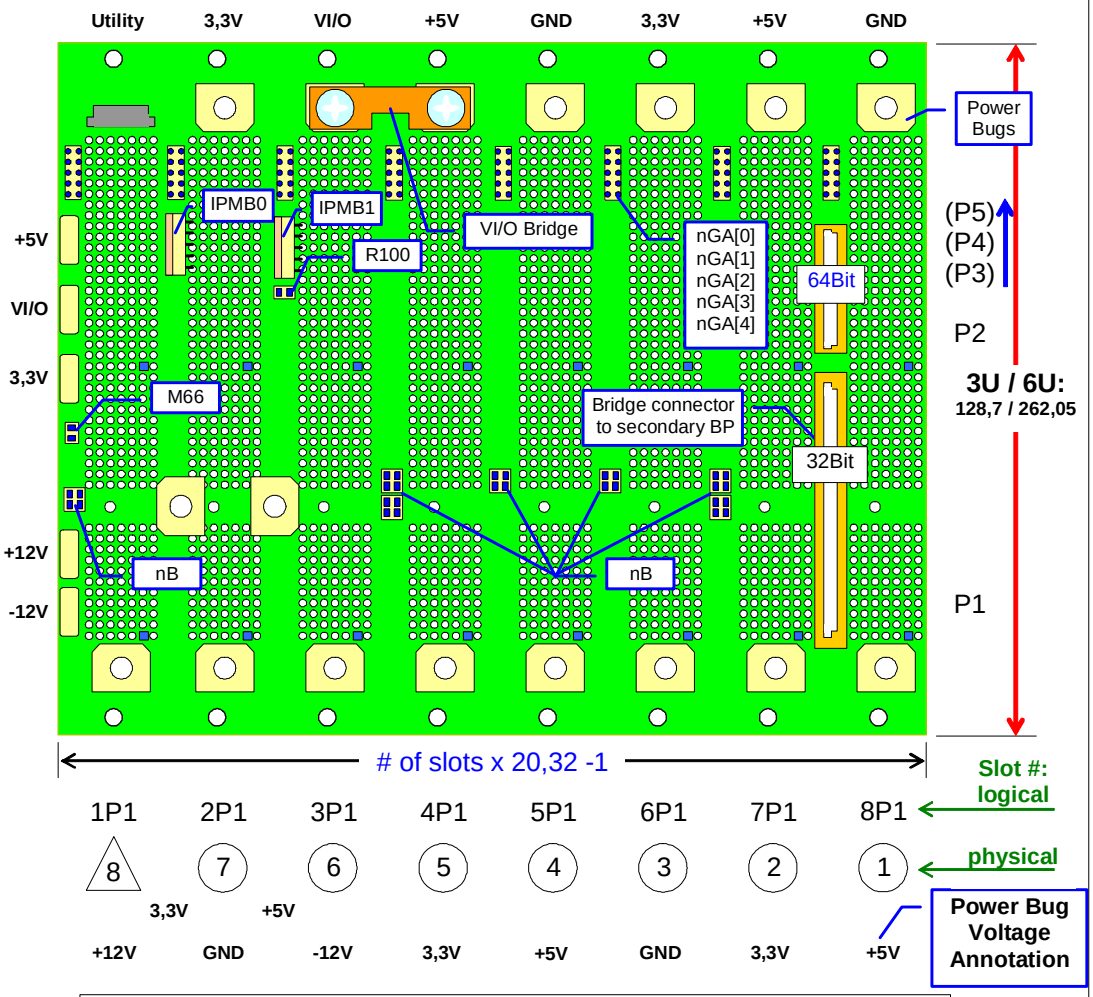

nB: Board Select resistor/capacitor pads; default grounded by a removable copper link in outer layer; n: slot number;

M66: 66MHz enabling line can be grounded using a 0603 zero Ohm resistor; default is grounded for backplanes comprising more than 5 slots

Faston Blades on left hand side only available on Backplanes < 4 Slots:

3 Slot BPs: V/IO Power Bug on Top is replaced by 3,3V
VI/O is set by a cable bridge between Fastons
+/- 12V Fastons not available

1&2 Slot BPs: Faston available as shown
no Power Bug on Top, replaced by IPMB0/1 connector

System Slot left Backplanes
placement of components and Power Bug annotation is mirrored