# RatiopacPRO Style

02/2024

nVent SCHROFF

# Desk-top cases – RatiopacPRO Style


**OVERVIEW**

MAIN KATALOG

Cabinets . . . . . 1

Wall mounted cases . . . . . 2

Accessories for cabinets and wall mounted cases . . 3

Climate control . . 4

Electronics cases . . . . . 5

Subracks/ 19" chassis . . . . . 6

Front panels, plug-in units . . . . 7

Systems . . . . . 8

Power supply units . . . . . 9

Backplanes . . . . 10

Connectors, front panel component system . . . . . 11

Appendix . . . . . 12


## VARIETY OF FRONT AND REAR OPTIONS

- Three different front and rear options embedded into the frame design, to provide a high level of protection and usability.

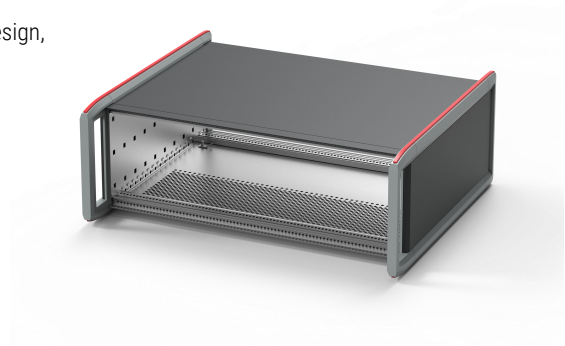

Version with Trim

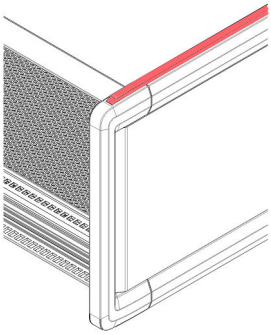

Version with Trim, Circulating

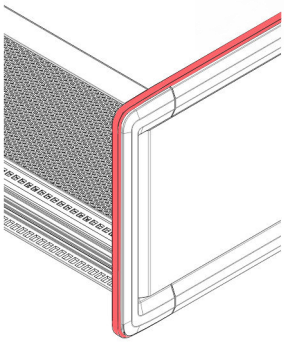

Version with Handle

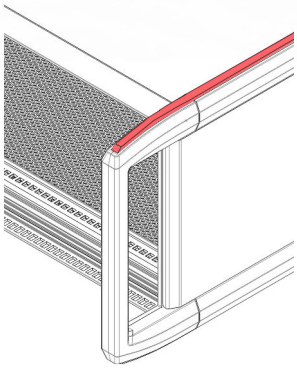

## RatiopacPRO Style

Designed for insertion/extractor handles in accordance with IEC 60297-3-102 and IEEE 1101.10 for CompactPCI and VME64x applications

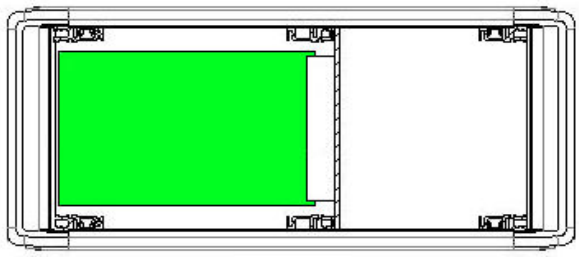

In addition to the front screwed front panels, also pre-configured version for a screwless front panels versions are offered for a clean case design.

Standard Version:

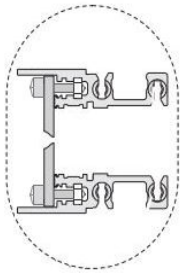

Screwless Version:

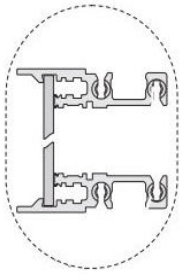

## STANDARDS

- Inner dimensions in accordance with:
  IEC 60297-3-101 / IEEE 1101.1
  IEC 60297-3-102 / IEEE 1101.10/11
- For board depth 160 mm, 220 mm, 280 mm, and 340 mm
- Type of protection IP30 (with front- and rear panel) in accordance with IEC 60529
- Earthing connections in accordance with:
  DIN EN 50178 / VDE 0160
  DIN EN 62368-1 / VDE 0805
  DIN EN 61010-1 / VDE 0411 part 1
- EMC testing in accordance with VG 95373 part 15

# Desk-top cases – RatiopacPRO Style

## OVERVIEW

### THE STYLISH CASE TO PROVIDE MAXIMUM FLEXIBILITY

- Desktop case with protective frame design and rubber strips
- Leverage proven platform to streamline the design process and minimize risks and delays.
- Achieve distinctive aesthetics through features like protective elements and stackability.
- Case for 19" components (guide rails) or proprietary components (mounting plate).
- For EMC-shielding, additional components need to be added, please refer to page 5.159
- No visible screws; cladding parts removable without tools

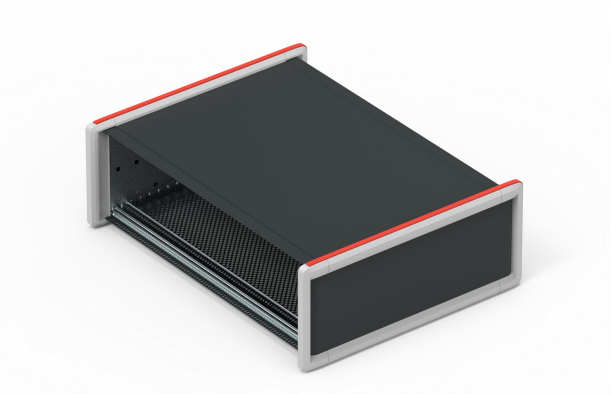

RatiopacPRO Style -
**Front and Rear Trims /**
Top & Bottom Rubber Strip

- Trim frame design on front and rear of desktop case for protection of connectors, jacks or plugs, when equipment is positioned vertically.
- Removeable rubber strip bottom and top of desktop case for extra protection of case and integrated stacking function

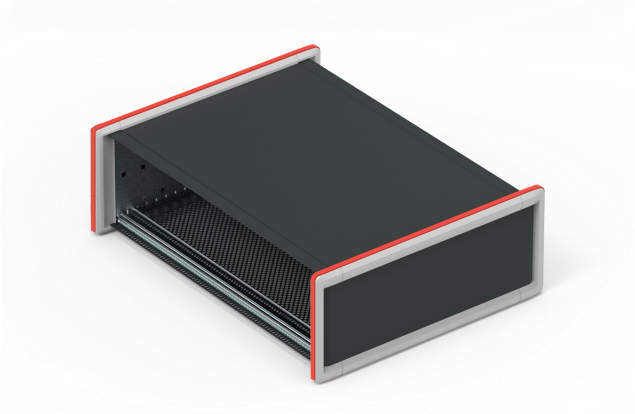

RatiopacPRO Style -
**Front and Rear Trims /**
Circulated Rubber Strip

- Trim frame design on front and rear of desktop case for protection of connectors, jacks or plugs, when equipment is positioned vertically.
- Non-Removable rubber strip all around the case to protect all corners, ideal for smaller mobile cases

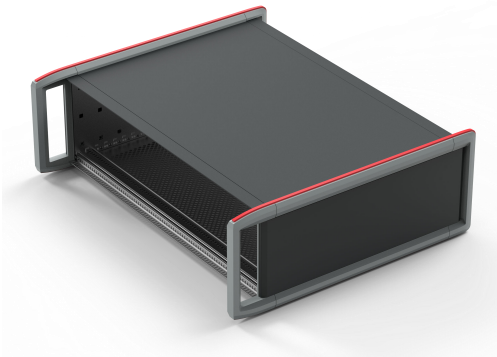

RatiopacPRO Style -
**Front** Handle **and Rear Trims /**
Top & Bottom Rubber Strip

- Front handle frame design on front to easy carry desktop cases, ideal for larger equipment
- Trim frame design on rear to protect rear connectors, jacks or plugs
- Removeable rubber strip bottom and top of desktop case for extra protection of case and integrated stacking function

Accessories

All accessories are compliant with RatiopacPRO Style, RatiopacPRO and RatiopacPRO Air

**SERVICEPLUS**

**e.g. modifications (cut-outs, special colours)**
**e.g. custom solutions (special sizes)**
**e.g. assembly service from 1 piece**


**Overview** . . . . . **5.1**51

RatiopacPRO Style

Front-/ Rear Trim . . . . **5.1**52

Cirulating Rubber Strip .5.154

Front Handle/Rear Trim 5.156

Dimension Drawings . . . . **5.1**57

**Accessories**

EMC gasketing . . . . . **5.1**59
Rear panels . . . . . 5.161
Front panels. . . . . 5.163
GND/earthing kit. . . . . 5.163
Air filters . . . . . 5.164
Air Baffle for Slots . . . . . 5.164
Horizontal rails front. . . . **5.**166
Horizontal rails rear. . . . . **5.1**67
Horizontal rails rear centre **5.**168
Horizontal rails AB. . . . . **5.1**69
Threaded inserts, perforated strips, insulation strips . . . . . **5.**170
Z-rails, perforated rails. . **5.**170
Assembly material, tools. 5.171
Divider plates . . . . . **5.**172
Mounting plates . . . . . **5.**173
Horizontal board assembly . . . . . **5.**174
Combined mounting . . . . **5.**175
Guide rails and ESD. . . . . 5.176

Service Plus:

Configurator. . . . . 5.182
Modifications . . . . . 5.183

Case Introduction . . . . . 5.184

# Desk-top cases – RatiopacPRO Style

## RatiopacPRO Style Case

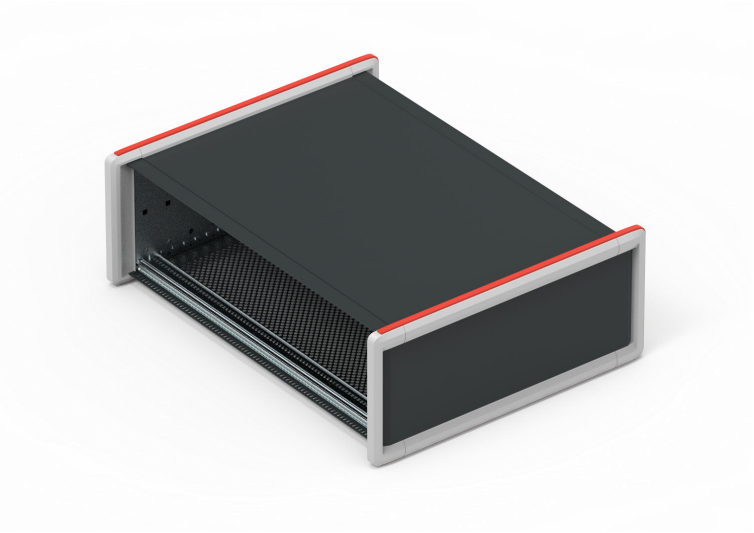

Version with Trims front and rear side

- Desktop case with protective frame design and rubber strips on the top and bottom for a secure stand and with integrated stacking function
- Case for 19" components (guide rails) or proprietary components (mounting plate).
- To establish EMC-shielding, additional components need to be added out of page 5.159 to the enclosure.
- Available in two versions:

  Standard (1) - Front and rear side prepared for front panel mounting with collar screws and sleeves.

  Screwless (2) - Front side for front panel mounting without screws and rear side prepared for standard front panel mounting.

Standard Version:

1

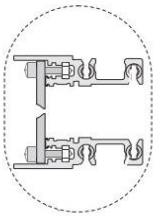

Screwless Version:

2

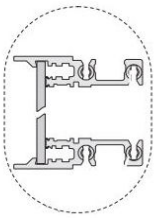

Delivery Comprise

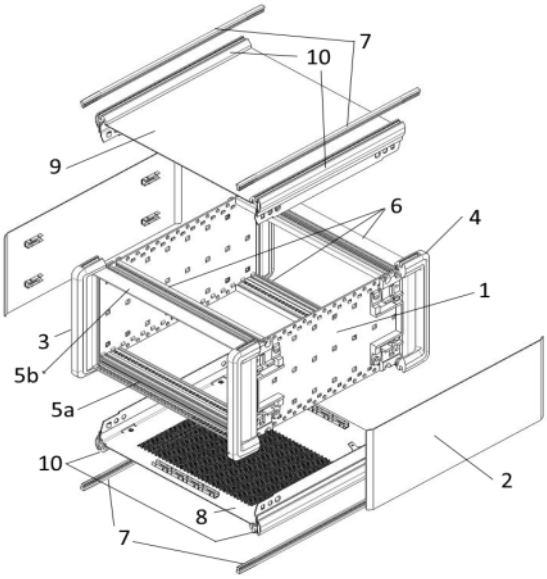


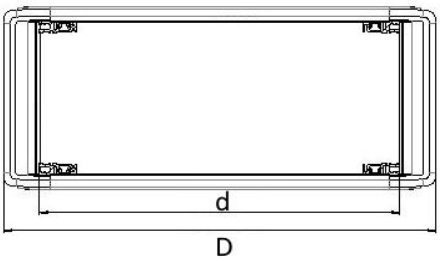


## DELIVERY COMPRISES (in kit form)

| Item | Qty Standard | Qty Screwless | Description |
|---|---|---|---|
| 1 | 2 | 2 | Side panel, Al, 2 mm, passivated |
| 2 | 2 | 2 | Side cover, Al, 1 mm, visible surface RAL 7016 |
| 3 | 2 | 2 | Front Trim, die-cast zinc, RAL 9006 |
| 4 | 2 | 2 | Rear Trim, die-cast zinc, RAL 9006 |
| 5a | 1 | - | Horizontal rail, type H-LD, Al, visible surfaces powder coated, RAL 7016, assembled on front side bottom, for IEEE application |
| 5b | - | 2 | Horizontal rail, type H-LD, Al, visible surfaces powder coated, RAL 7016, assembled on front side bottom, for screwless front |
| 6 | 3 | 2 | Horizontal rail, type H-LD, Al, visible surfaces powder coated, RAL 7016, |
| 7 | 4 | 4 | Rubber strip, RAL 3000 |
| 8 | 1 | 1 | Bottom cover with round perforation Ø 2.3mm, Al, 1 mm, internal surface conductive, visible surface RAL 7016, with GND/earthing connection |
| 9 | 1 | 1 | Top cover, Al 1 mm, Surface RAL 7016, with GND/ earthing connection |
| 10 | 4 | 4 | Depth profile, Al-profile, RAL 9006 |
| 11 | 1 | 1 | Fixing materials kit and user manual |

## ORDER INFORMATION

| Height H U | Width W HP | Depth D mm | Depth d mm | Standard Part no. | Screwless Part no. |
|---|---|---|---|---|---|
| 2 | 28 | 294.4 | 235.5 | 24582- 210 | 24582- 214 |
| 2 | 28 | 354.4 | 295.5 | 24582- 211 | 24582- 215 |
| 2 | 42 | 294.4 | 235.5 | 24582- 220 | 24582- 224 |
| 2 | 42 | 354.4 | 295.5 | 24582- 221 | 24582- 225 |
| 2 | 42 | 414.4 | 355.5 | 24582- 222 | 24582- 226 |
| 2 | 63 | 294.4 | 235.5 | 24582- 230 | 24582- 234 |
| 2 | 63 | 354.4 | 295.5 | 24582- 231 | 24582- 235 |
| 2 | 63 | 414.4 | 355.5 | 24582- 232 | 24582- 236 |
| 2 | 84 | 294.4 | 235.5 | 24582- 240 | 24582- 244 |
| 2 | 84 | 354.4 | 295.5 | 24582- 241 | 24582- 245 |
| 2 | 84 | 414.4 | 355.5 | 24582- 242 | 24582- 246 |
| 2 | 84 | 474.4 | 415.5 | 24582- 243 | 24582- 247 |
| 3 | 28 | 294.4 | 235.5 | **24582-**310 | **24582-**314 |
| 3 | 28 | 354.4 | 295.5 | **24582-**311 | **24582-**315 |
| 3 | 42 | 294.4 | 235.5 | **24582-320** | **24582-324** |
| 3 | 42 | 354.4 | 295.5 | **24582-321** | **24582-325** |
| 3 | 42 | 414.4 | 355.5 | **24582-322** | **24582-326** |
| 3 | 63 | 294.4 | 235.5 | **24582-330** | **24582-334** |
| 3 | 63 | 354.4 | 295.5 | **24582-331** | **24582-335** |
| 3 | 63 | 414.4 | 355.5 | **24582-332** | **24582-336** |
| 3 | 84 | 294.4 | 235.5 | **24582-340** | **24582-344** |
| 3 | 84 | 354.4 | 295.5 | **24582-341** | **24582-345** |
| 3 | 84 | 414.4 | 355.5 | **24582-342** | **24582-346** |
| 3 | 84 | 474.4 | 415.5 | **24582-343** | **24582-347** |

Remark:

4 U and 6 U version on the next page

Accessories:

- EMC shielding kits, page 5.159
- GND / grounding kit, page 5.163

# Desk-top cases – RatiopacPRO Style

## RatiopacPRO Style Case

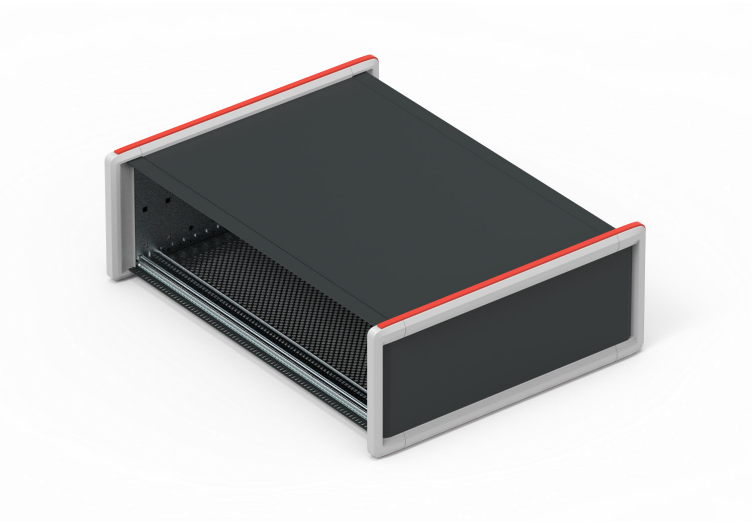

Version with Trims front and rear side

- Desktop case with protective frame design and rubber strips on the top and bottom for a secure stand and with integrated stacking function
- Case for 19" components (guide rails) or proprietary components (mounting plate).
- To establish EMC-shielding, additional components need to be added out of page 5.159 to the enclosure.
- Available in two versions:

  Standard (1) - Front and rear side prepared for front panel mounting with collar screws and sleeves.

  Screwless (2) - Front side for front panel mounting without screws and rear side prepared for standard front panel mounting.

Standard Version:

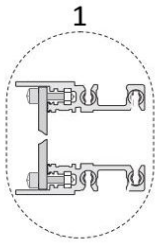


Screwless Version:

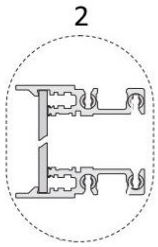


Delivery Comprise

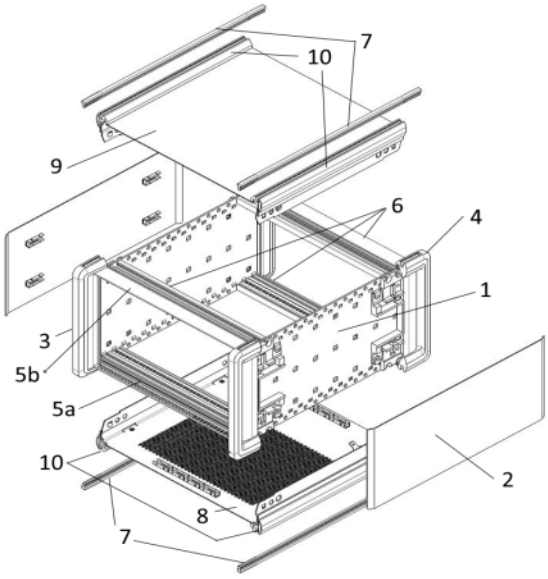


Side view

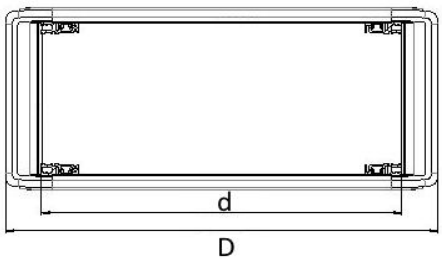


### DELIVERY COMPRISES (in kit form)

| Item | Qty Standard 4U | Qty Standard 6U | Qty Screwless 4U | Qty Screwless 6U | Description |
|---|---|---|---|---|---|
| 1 | 2 | 2 | 2 | 2 | Side panel, Al, 2 mm, passivated |
| 2 | 2 | 2 | 2 | 2 | Side cover, Al, 1 mm, visible surface RAL 7016 |
| 3 | 2 | 2 | 2 | 2 | Front Trim, die-cast zinc, RAL 9006 |
| 4 | 2 | 2 | 2 | 2 | Rear Trim, die-cast zinc, RAL 9006 |
| 5a | 1 | 2 | - | - | Horizontal rail, type H-LD, Al, visible surfaces powder coated, RAL 7016, assembled on front side bottom, for IEEE application |
| 5b | - | - | 2 | 2 | Horizontal rail, type H-LD, Al, visible surfaces powder coated, RAL 7016, assembled on front side bottom, for screwless front |
| 6 | 3 | 2 | 2 | 2 | Horizontal rail, type H-LD, Al, visible surfaces powder coated, RAL 7016, |
| 7 | 4 | 4 | 4 | 4 | Rubber strip, RAL 3000 |
| 8 | 1 | 1 | 1 | 1 | Bottom cover with round perforation Ø 2.3mm, Al, 1 mm, internal surface conductive, visible surface RAL 7016, with GND/earthing connection |
| 9 | 1 | 1 | 1 | 1 | Top cover, Al 1 mm, Surface RAL 7016, with GND/ earthing connection |
| 10 | 4 | 4 | 4 | 4 | Depth profile, Al-profile, RAL 9006 |
| 11 | 1 | 1 | 1 | 1 | Fixing materials kit and user manual |

### ORDER INFORMATION

| Height H U | Width W HP | Depth D mm | Depth d mm | Standard Part no. | Screwless Part no. |
|---|---|---|---|---|---|
| 4 | 42 | 294.4 | 235.5 | **24582-420** | **24582-424** |
| 4 | 42 | 354.4 | 295.5 | **24582-421** | **24582-425** |
| 4 | 42 | 414.4 | 355.5 | **24582-422** | **24582-426** |
| 4 | 63 | 294.4 | 235.5 | **24582-430** | **24582-434** |
| 4 | 63 | 354.4 | 295.5 | **24582-431** | **24582-435** |
| 4 | 63 | 414.4 | 355.5 | **24582-432** | **24582-436** |
| 4 | 84 | 294.4 | 235.5 | **24582-440** | **24582-444** |
| 4 | 84 | 354.4 | 295.5 | **24582-441** | **24582-445** |
| 4 | 84 | 414.4 | 355.5 | **24582-442** | **24582-446** |
| 4 | 84 | 474.4 | 415.5 | **24582-443** | **24582-447** |
| 6 | 42 | 294.4 | 235.5 | 24582- 620 | 24582- 624 |
| 6 | 42 | 354.4 | 295.5 | 24582- 621 | 24582- 625 |
| 6 | 42 | 414.4 | 355.5 | 24582- 622 | 24582- 626 |
| 6 | 63 | 294.4 | 235.5 | 24582- 630 | 24582- 634 |
| 6 | 63 | 354.4 | 295.5 | 24582- 631 | 24582- 635 |
| 6 | 63 | 414.4 | 355.5 | 24582- 632 | 24582- 636 |
| 6 | 84 | 294.4 | 235.5 | 24582- 640 | 24582- 644 |
| 6 | 84 | 354.4 | 295.5 | 24582- 641 | 24582- 645 |
| 6 | 84 | 414.4 | 355.5 | 24582- 642 | 24582- 646 |
| 6 | 84 | 474.4 | 415.5 | 24582- 643 | 24582- 647 |

Accessories:

- EMC shielding kits, page 5.159
- GND / grounding kit, page 5.163

# Desk-top cases – RatiopacPRO Style

## RatiopacPRO Style Case

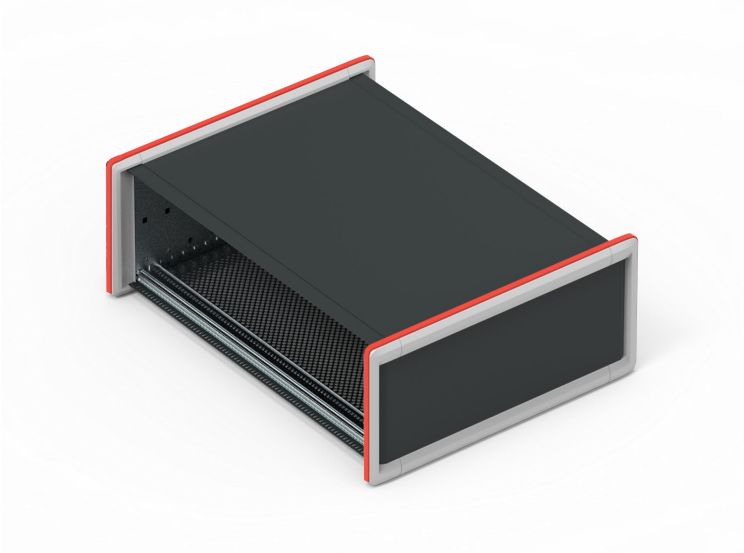

Version with Trims front and rear side and circulation rubber strip

- Desktop case with protective frame design and rubber strips all around the frame, for even more protection.
- Case for 19" components (guide rails) or proprietary components (mounting plate).
- To establish EMC-shielding, additional components need to be added out of page 5.159 to the enclosure.
- Available in two versions:

  Standard (1) - Front and rear side prepared for front panel mounting with collar screws and sleeves.

  Screwless (2) - Front side for front panel mounting without screws and rear side prepared for standard front panel mounting.

Standard Version:

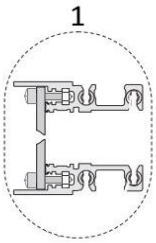


Screwless Version:

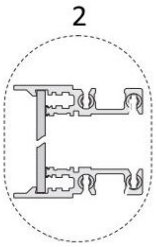


Delivery Comprise

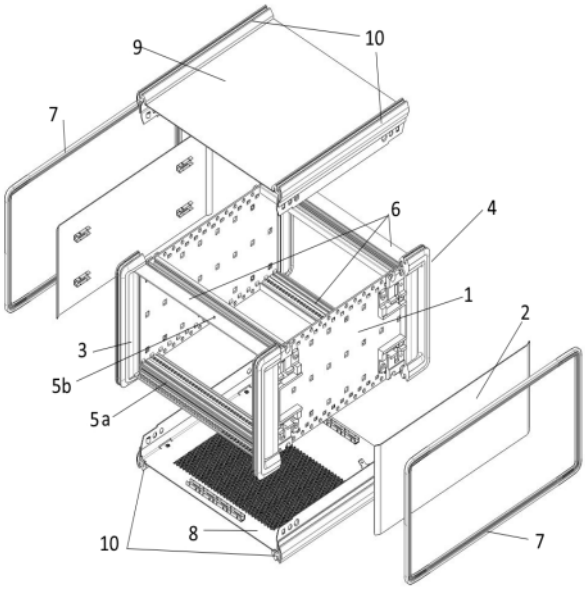


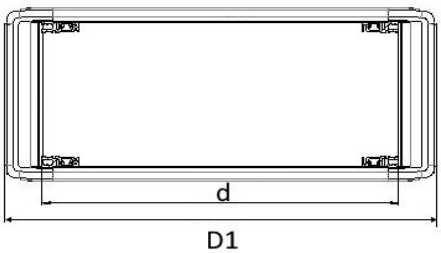


### DELIVERY COMPRISES (in kit form)

| Item | Qty Standard | Qty Screwless | Description |
|---|---|---|---|
| 1 | 2 | 2 | Side panel, Al, 2 mm, passivated |
| 2 | 2 | 2 | Side cover, Al, 1 mm, visible surface RAL 7016 |
| 3 | 2 | 2 | Front Trim, die-cast zinc, RAL 9006 |
| 4 | 2 | 2 | Rear Trim, die-cast zinc, RAL 9006 |
| 5a | 1 | - | Horizontal rail, type H-LD, Al, visible surfaces powder coated, RAL 7016, assembled on front side bottom, for IEEE application |
| 5b | - | 2 | Horizontal rail, type H-LD, Al, visible surfaces powder coated, RAL 7016, assembled on front side bottom, for screwless front |
| 6 | 3 | 2 | Horizontal rail, type H-LD, Al, visible surfaces powder coated, RAL 7016, |
| 7 | 2 | 2 | Rubber strip, RAL 3000 |
| 8 | 1 | 1 | Bottom cover with round perforation Ø 2.3mm, Al, 1 mm, internal surface conductive, visible surface RAL 7016, with GND/earthing connection |
| 9 | 1 | 1 | Top cover, Al 1 mm, Surface RAL 7016, with GND/ earthing connection |
| 10 | 4 | 4 | Depth profile, Al-profile, RAL 9006 |
| 11 | 1 | 1 | Fixing materials kit and user manual |

### ORDER INFORMATION

| Height H U | Width W HP | Depth D1 mm | Depth d mm | Standard Part no. | Screwless Part no. |
|---|---|---|---|---|---|
| 2 | 28 | 298.4 | 235.5 | 24581-210 | 24581-214 |
| 2 | 28 | 358.4 | 295.5 | 24581-211 | 24581-215 |
| 2 | 42 | 298.4 | 235.5 | 24581-220 | 24581-224 |
| 2 | 42 | 358.4 | 295.5 | 24581-221 | 24581-225 |
| 2 | 42 | 418.4 | 355.5 | 24581-222 | 24581-226 |
| 2 | 63 | 298.4 | 235.5 | 24581-230 | 24581-234 |
| 2 | 63 | 358.4 | 295.5 | 24581-231 | 24581-235 |
| 2 | 63 | 418.4 | 355.5 | 24581-232 | 24581-236 |
| 2 | 84 | 298.4 | 235.5 | 24581-240 | 24581-244 |
| 2 | 84 | 358.4 | 295.5 | 24581-241 | 24581-245 |
| 2 | 84 | 418.4 | 355.5 | 24581-242 | 24581-246 |
| 2 | 84 | 478.4 | 415.5 | 24581-243 | 24581-247 |
| 3 | 28 | 298.4 | 235.5 | **24581-**310 | **24581-**314 |
| 3 | 28 | 358.4 | 295.5 | **24581-**311 | **24581-**315 |
| 3 | 42 | 298.4 | 235.5 | **24581-320** | **24581-324** |
| 3 | 42 | 358.4 | 295.5 | **24581-321** | **24581-325** |
| 3 | 42 | 418.4 | 355.5 | **24581-322** | **24581-326** |
| 3 | 63 | 298.4 | 235.5 | **24581-330** | **24581-334** |
| 3 | 63 | 358.4 | 295.5 | **24581-331** | **24581-335** |
| 3 | 63 | 418.4 | 355.5 | **24581-332** | **24581-336** |
| 3 | 84 | 298.4 | 235.5 | **24581-340** | **24581-344** |
| 3 | 84 | 358.4 | 295.5 | **24581-341** | **24581-345** |
| 3 | 84 | 418.4 | 355.5 | **24581-342** | **24581-346** |
| 3 | 84 | 478.4 | 415.5 | **24581-343** | **24581-347** |

Remark:

4 U and 6 U version on the next page

Accessories:

- EMC shielding kits, page 5.159
- GND / grounding kit, page 5.163

# Desk-top cases – RatiopacPRO Style

## RatiopacPRO Style Case

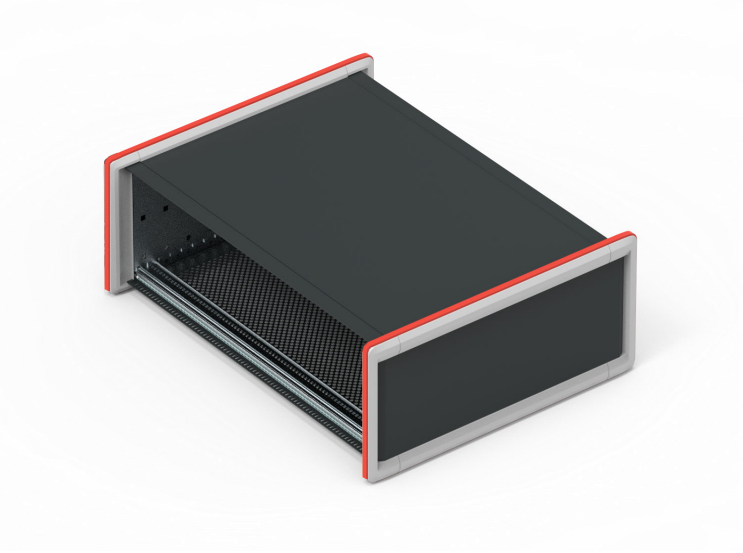

Version with Trims front and rear side and circulation rubber strip

- Desktop case with protective frame design and rubber strips all around the frame, for even more protection.
- Case for 19" components (guide rails) or proprietary components (mounting plate).
- To establish EMC-shielding, additional components need to be added out of page 5.159 to the enclosure.
- Available in two versions:

  Standard (1) - Front and rear side prepared for front panel mounting with collar screws and sleeves.

  Screwless (2) - Front side for front panel mounting without screws and rear side prepared for standard front panel mounting.

Standard Version:

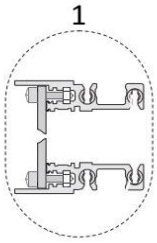


Screwless Version:

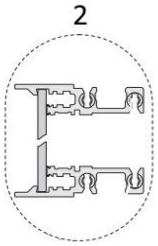


Delivery Comprise

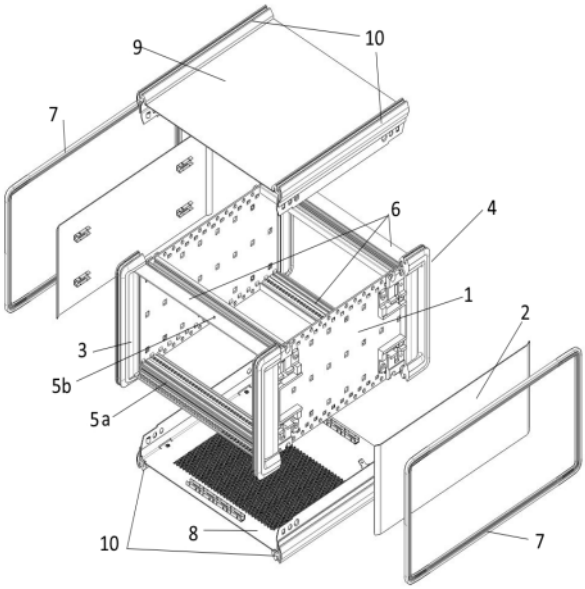


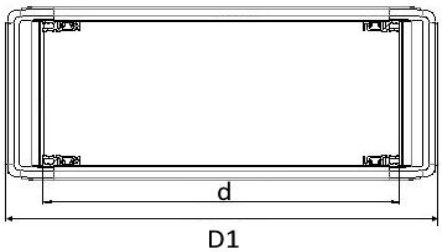


### DELIVERY COMPRISES (in kit form)

| Item | Qty Standard 4U | Qty Standard 6U | Qty Screwless 4U | Qty Screwless 6U | Description |
|---|---|---|---|---|---|
| 1 | 2 | 2 | 2 | 2 | Side panel, Al, 2 mm, passivated |
| 2 | 2 | 2 | 2 | 2 | Side cover, Al, 1 mm, visible surface RAL 7016 |
| 3 | 2 | 2 | 2 | 2 | Front Trim, die-cast zinc, RAL 9006 |
| 4 | 2 | 2 | 2 | 2 | Rear Trim, die-cast zinc, RAL 9006 |
| 5a | 1 | 2 | - | - | Horizontal rail, type H-LD, Al, visible surfaces powder coated, RAL 7016, assembled on front side bottom, for IEEE application |
| 5b | - | - | 2 | 2 | Horizontal rail, type H-LD, Al, visible surfaces powder coated, RAL 7016, assembled on front side bottom, for screwless front |
| 6 | 3 | 2 | 2 | 2 | Horizontal rail, type H-LD, Al, visible surfaces powder coated, RAL 7016, |
| 7 | 4 | 4 | 4 | 4 | Rubber strip, RAL 3000 |
| 8 | 1 | 1 | 1 | 1 | Bottom cover with round perforation Ø 2.3mm, Al, 1 mm, internal surface conductive, visible surface RAL 7016, with GND/earthing connection |
| 9 | 1 | 1 | 1 | 1 | Top cover, Al 1 mm, Surface RAL 7016, with GND/ earthing connection |
| 10 | 4 | 4 | 4 | 4 | Depth profile, Al-profile, RAL 9006 |
| 11 | 1 | 1 | 1 | 1 | Fixing materials kit and user manual |

### ORDER INFORMATION

| Height H U | Width W HP | Depth D1 mm | Depth d mm | Standard Part no. | Screwless Part no. |
|---|---|---|---|---|---|
| 4 | 42 | 298.4 | 235.5 | **24581-420** | **24581-424** |
| 4 | 42 | 358.4 | 295.5 | **24581-421** | **24581-425** |
| 4 | 42 | 418.4 | 355.5 | **24581-422** | **24581-426** |
| 4 | 63 | 298.4 | 235.5 | **24581-430** | **24581-434** |
| 4 | 63 | 358.4 | 295.5 | **24581-431** | **24581-435** |
| 4 | 63 | 418.4 | 355.5 | **24581-432** | **24581-436** |
| 4 | 84 | 298.4 | 235.5 | **24581-440** | **24581-444** |
| 4 | 84 | 358.4 | 295.5 | **24581-441** | **24581-445** |
| 4 | 84 | 418.4 | 355.5 | **24581-442** | **24581-446** |
| 4 | 84 | 478.4 | 415.5 | **24581-443** | **24581-447** |
| 6 | 42 | 298.4 | 235.5 | 24581-620 | 24581-624 |
| 6 | 42 | 358.4 | 295.5 | 24581-621 | 24581-625 |
| 6 | 42 | 418.4 | 355.5 | 24581-622 | 24581-626 |
| 6 | 63 | 298.4 | 235.5 | 24581-630 | 24581-634 |
| 6 | 63 | 358.4 | 295.5 | 24581-631 | 24581-635 |
| 6 | 63 | 418.4 | 355.5 | 24581-632 | 24581-636 |
| 6 | 84 | 298.4 | 235.5 | 24581-640 | 24581-644 |
| 6 | 84 | 358.4 | 295.5 | 24581-641 | 24581-645 |
| 6 | 84 | 418.4 | 355.5 | 24581-642 | 24581-646 |
| 6 | 84 | 478.4 | 415.5 | 24581-643 | 24581-647 |

Accessories:

- EMC shielding kits, page 5.159
- GND / grounding kit, page 5.163

# Desk-top cases – RatiopacPRO Style

## RatiopacPRO Style Case

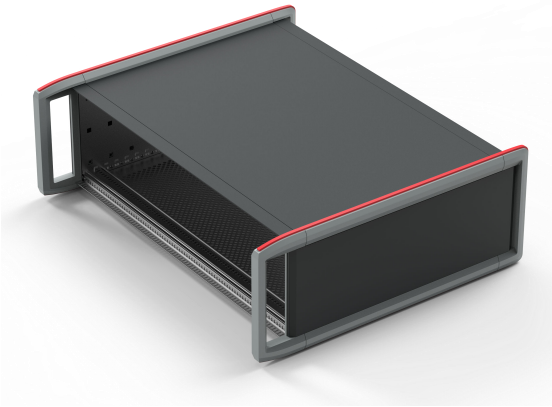

Version with Handles on front and trims on rear side

- Desktop case with protective frame design and front handles for a easy handling. Rear side with a circulating rubber strip to protect the enclosure during the transport.
- Case for 19" components (guide rails) or proprietary components (mounting plate).
- To establish EMC-shielding, additional components need to be added out of page 5.159 to the enclosure.
- Available in two versions:
  Standard (1) - Front and rear side prepared for front panel mounting with collar screws and sleeves.
  Screwless (2) - Front side for front panel mounting without screws and rear side prepared for standard front panel mounting.

Standard Version:

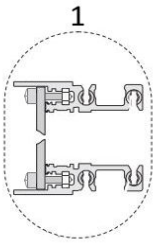


Screwless Version:

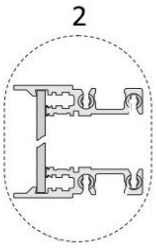


Delivery Comprise

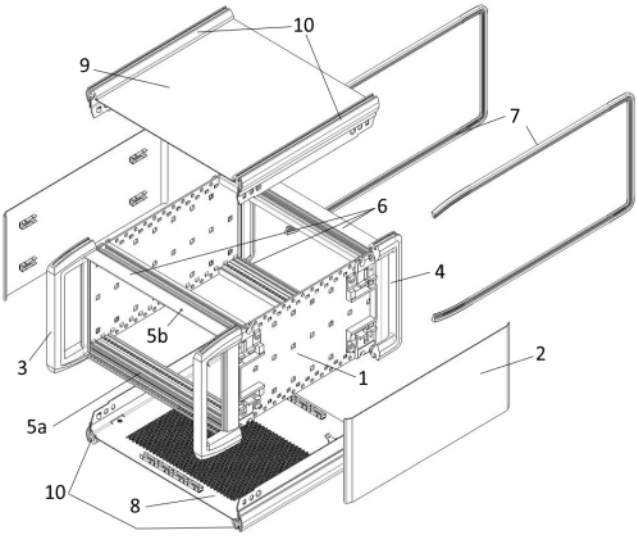


Side view

### DELIVERY COMPRISES (in kit form)

| Item | Qty Standard | Qty Screwless | Description |
|---|---|---|---|
| 1 | 2 | 2 | Side panel, Al, 2 mm, passivated |
| 2 | 2 | 2 | Side cover, Al, 1 mm, visible surface RAL 7016 |
| 3 | 2 | 2 | Front Handle, die-cast zinc, RAL 9006 |
| 4 | 2 | 2 | Rear Trim, die-cast zinc, RAL 9006 |
| 5a | 1 | - | Horizontal rail, type H-LD, Al, visible surfaces powder coated, RAL 7016, assembled on front side bottom, for IEEE application |
| 5b | - | 2 | Horizontal rail, type H-LD, Al, visible surfaces powder coated, RAL 7016, assembled on front side bottom, for screwless front |
| 6 | 3 | 2 | Horizontal rail, type H-LD, Al, visible surfaces powder coated, RAL 7016, |
| 7 | 2 | 2 | Rubber strip, RAL 3000 |
| 8 | 1 | 1 | Bottom cover with round perforation Ø 2.3mm, Al, 1 mm, internal surface conductive, visible surface RAL 7016, with GND/earthing connection |
| 9 | 1 | 1 | Top cover, Al 1 mm, Surface RAL 7016, with GND/ earthing connection |
| 10 | 4 | 4 | Depth profile, Al-profile, RAL 9006 |
| 11 | 1 | 1 | Fixing materials kit and user manual |

### ORDER INFORMATION

| Height H U | Width W HP | Depth D2 mm | Depth d mm | Standard Part no. | Screwless Part no. |
|---|---|---|---|---|---|
| 3 | 28 | 321.9 | 235.5 | **24580-**310 | **24580-**314 |
| 3 | 28 | 381.9 | 295.5 | **24580-**311 | **24580-**315 |
| 3 | 42 | 321.9 | 235.5 | **24580-320** | **24580-324** |
| 3 | 42 | 381.9 | 295.5 | **24580-321** | **24580-325** |
| 3 | 42 | 441.9 | 355.5 | **24580-322** | **24580-326** |
| 3 | 63 | 321.9 | 235.5 | **24580-330** | **24580-334** |
| 3 | 63 | 381.9 | 295.5 | **24580-331** | **24580-335** |
| 3 | 63 | 441.9 | 355.5 | **24580-332** | **24580-336** |
| 3 | 84 | 321.9 | 235.5 | **24580-340** | **24580-344** |
| 3 | 84 | 381.9 | 295.5 | **24580-341** | **24580-345** |
| 3 | 84 | 441.9 | 355.5 | **24580-342** | **24580-346** |
| 3 | 84 | 501.9 | 415.5 | **24580-343** | **24580-347** |
| 4 | 42 | 321.9 | 235.5 | 24580-420 | 24580-424 |
| 4 | 42 | 381.9 | 295.5 | 24580-421 | 24580-425 |
| 4 | 42 | 441.9 | 355.5 | 24580-422 | 24580-426 |
| 4 | 63 | 321.9 | 235.5 | 24580-430 | 24580-434 |
| 4 | 63 | 381.9 | 295.5 | 24580-431 | 24580-435 |
| 4 | 63 | 441.9 | 355.5 | 24580-432 | 24580-436 |
| 4 | 84 | 321.9 | 235.5 | 24580-440 | 24580-444 |
| 4 | 84 | 381.9 | 295.5 | 24580-441 | 24580-445 |
| 4 | 84 | 441.9 | 355.5 | 24580-442 | 24580-446 |
| 4 | 84 | 501.9 | 415.5 | 24580-443 | 24580-447 |

Accessories:

- EMC shielding kits, page 5.159
- GND / grounding kit, page 5.163

# Desk-top cases – RatiopacPRO Style

## DIMENSION DRAWINGS RATIOPACPRO Style

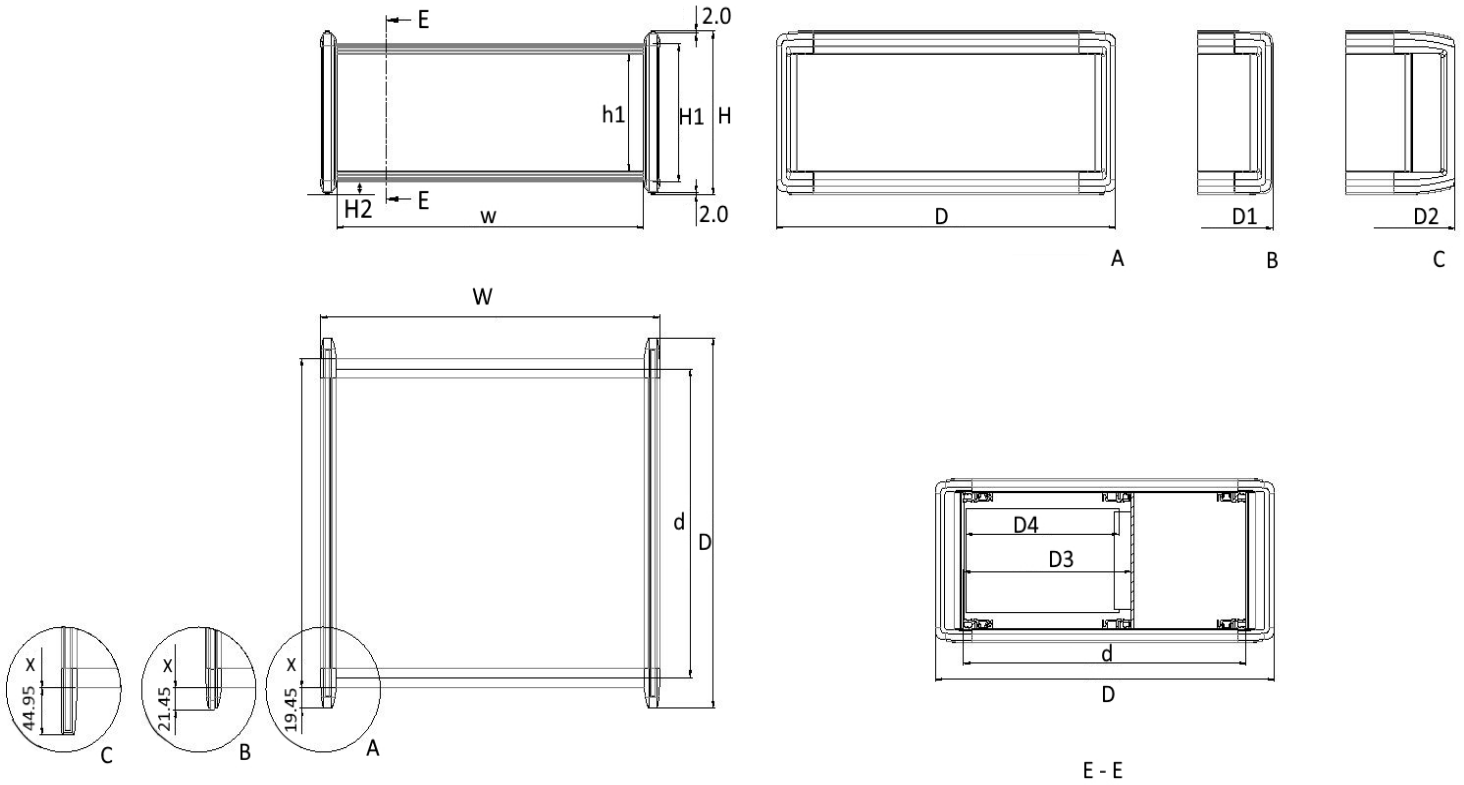


H2 = 12.0mm

RatiopacPRO Style:

With Trim = A ; With Trims and Circualting Rubber inlay = B; With Front Handle = C

| Dimensions Table RatiopacPRO Style | | | | | | |
|---|---|---|---|---|---|---|
| Height | | | | Width | | |
| H in U | H in mm | H1 in mm | h1 in mm | in HP | w in mm | W in mm |
| 2 | 112.10 | 88.10 | 67.90 | 28 | 142.82 | 176.42 |
| | | | | 42 | 213.94 | 247.54 |
| | | | | 63 | 320.62 | 354.22 |
| | | | | 84 | 427.30 | 460.90 |
| 3 | 156.55 | 132.55 | 112.35 | 28 | 142.82 | 176.42 |
| | | | | 42 | 213.94 | 247.54 |
| | | | | 63 | 320.62 | 354.22 |
| | | | | 84 | 427.30 | 460.90 |
| 4 | 201.00 | 177.00 | 156.80 | 28 | 142.82 | 176.42 |
| | | | | 42 | 213.94 | 247.54 |
| | | | | 63 | 320.62 | 354.22 |
| | | | | 84 | 427.30 | 460.90 |
| 6 | 289.90 | 265.90 | 245.70 | 28 | 142.82 | 176.42 |
| | | | | 42 | 213.94 | 247.54 |
| | | | | 63 | 320.62 | 354.22 |
| | | | | 84 | 427.30 | 460.90 |

| | Depth | | | D3 | D4 |
|---|---|---|---|---|---|
| d Useable depth in mm | D in mm | D1 in mm | D2 in mm | Plug-in Unit depth in mm | Board depth in mm |
| 235.5 | 294.40 | 298.40 | 321.90 | 175.5 | 160 |
| | | | | 235.5 | 160/220 |
| 295.5 | 354.40 | 356.40 | 381.90 | 175.5 | 160 |
| | | | | 235.5 | 160/220 |
| | | | | 295.5 | 160/220/280 |
| 355.5 | 414.40 | 418.40 | 441.90 | 175.5 | 160 |
| | | | | 235.5 | 160/220 |
| | | | | 295.5 | 160/220/280 |
| | | | | 355.5 | 160/220/280/340 |
| 415.5 | 474.40 | 478.40 | 501.90 | 175.5 | 160 |
| | | | | 235.5 | 160/220 |
| | | | | 295.5 | 160/220/280 |
| | | | | 355.5 | 160/220/280/340 |

X = d +19.80mm

Components mountable in 15 mm depth grid

Drawing is only for visualization

# RatiopacPRO Platform Accessories

## EMC-SHIELDING & EARTHING

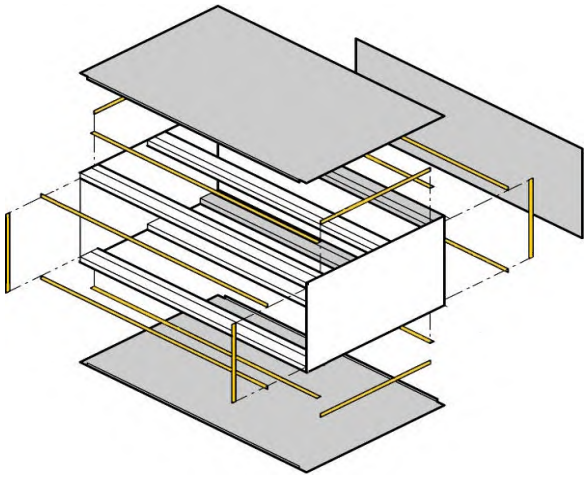

By adding following components to the RatiopacPRO Style case, a superior RF-shielding can be established:

- EMC sealing front/ rear panel to side panel, page 5.159
- EMC sealing side panel to cover plate, page 5.159
- Front and rear panels with EMC sealing, page 5.160 to 5.163

## AIR-COOLING ACCESSORIES

Air Baffles and Air Filters:

- Air Filter, page 5.164
- Air Baffles, page 5.164

## CARD CAGE MECHANICS

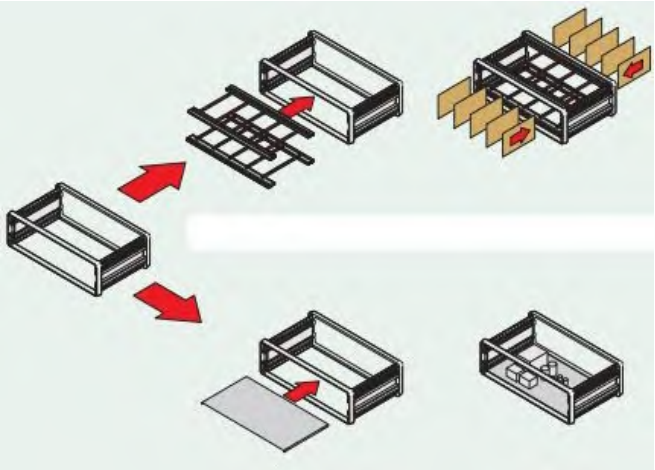

Horizontal rails, Chassis plates, Guide rails

- Horizontal rails, page 5.165 to 5.169
- Threaded inserts, perforated strip, insulation strip, page 5.170
- Divider plate / Chassis plate, page 5.172 to 5.173
- Horizontal board mounting / Combined mounting, page 5.174 to 5.175
- Guide rails, page 5.176 to 5.181

## SERVICE PLUS

Service Plus

- Configuration, page 5.182
- Modification, page 5.183

# RatiopacPRO Platform Accessories

## EMC SEALING FRONT/REAR PANEL TO SIDE PANEL

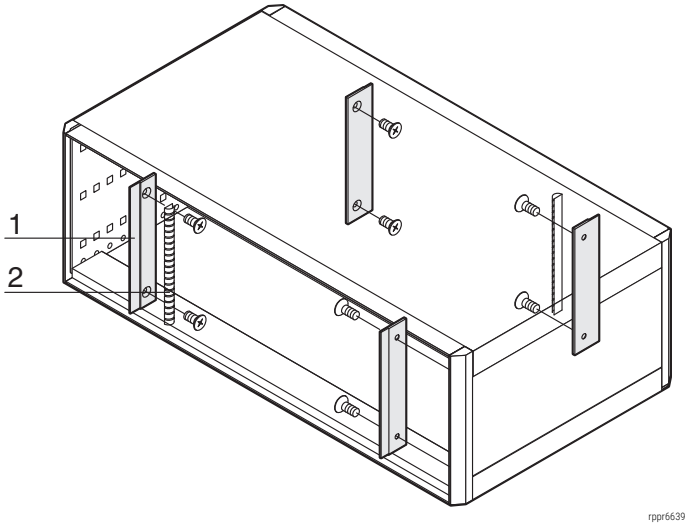


Drawing is only for visualization. Accessories are compliant with RatiopacPRO Style, RatiopacPRO and RatiopacPRO Air

- For vertical EMC shielding between sub-assemblies and side panel
- Scope of delivery sufficient for one case

### DELIVERY COMPRISES (kit)

| Item | Qty | Description |
|---|---|---|
| 1 | 4 | EMC support profile, Al extrusion |
| 2 | 2 | EMC sealing (textile), core: foam, sleeve: textile cladding with CuNi coating |
| 3 | 1 | Assembly kit |

### ORDER INFORMATION

| For case height U | Part no. |
|---|---|
| 2 | **24571-334** |
| 3 | **24571-331** |
| 4 | **24571-332** |
| 6 | **24571-333** |

## EMC SEALING SIDE PANEL TO COVER PLATE

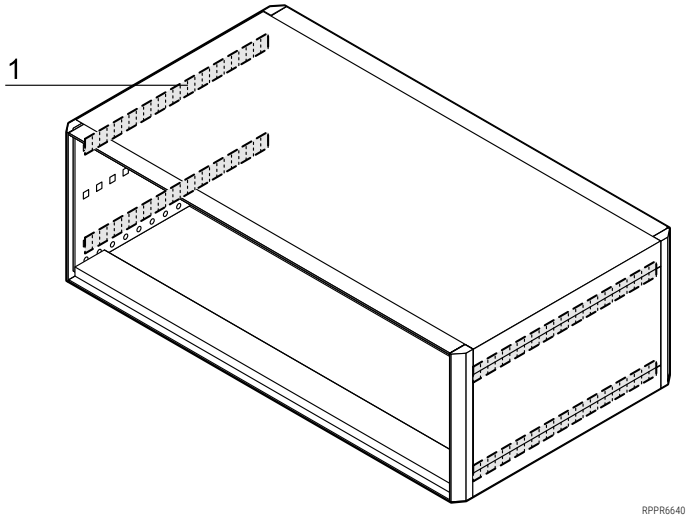


Drawing is only for visualization. Accessories are compliant with RatiopacPRO Style, RatiopacPRO and RatiopacPRO Air

- For horizontal EMC shielding between side panels and cover plates
- Scope of delivery sufficient for one case

### DELIVERY COMPRISES (kit)

| Item | Qty | Description |
|---|---|---|
| 1 | 4 | Contact strip, stainless steel |

### ORDER INFORMATION

| Depth d mm | Part no. |
|---|---|
| 255 | **24571-338** |
| 315 | **24571-339** |
| 375 | **24571-340** |
| 435 | **24571-341** |

# RatiopacPRO Platform Accessories

## EMC SEALING FRONT/REAR PANEL TO HORIZONTAL RAIL

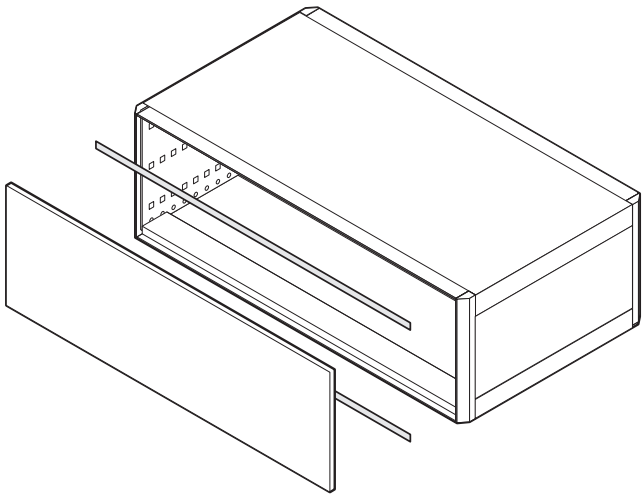

rppr6739

Drawing is only for visualization. Accessories are compliant with RatiopacPRO Style, RatiopacPRO and RatiopacPRO Air

- The contact strip is clipped onto the horizontal rail and sets up the contact to front panel or rear panel
- Can be used for rear horizontal rails (H-VT, L-VT) and all front horizontal rails

### DELIVERY COMPRISES

| Item | Qty | Description |
|---|---|---|
| 1 | 10/100 | Stainless steel EMC gasket |

### ORDER INFORMATION

| Width HP | Width mm | Qty/PU | Part no. |
|---|---|---|---|
| 28 | 131.78 | 10 | **24560-229** |
| 42 | 202.9 | 10 | **24560-231** |
| 63 | 304.8 | 10 | **24560-233** |
| 84 | 416.3 | 10 | **24560-235** |
| 84 | 416.3 | 100 | **24560-236** |
| Assembly tool for EMC sealing, St, stainless (horizontal rails front side),1 piece | | | **24560-270** |

## EMC SEALING HORIZONTAL RAIL TO HORIZONTAL RAIL

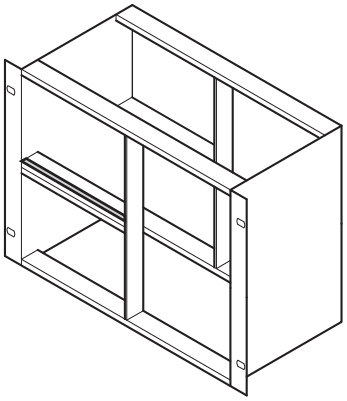

BPA46548

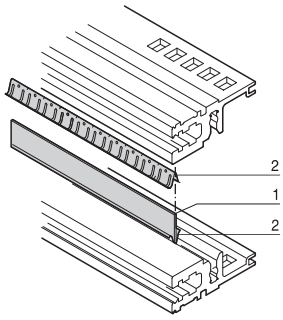


BZA45877

- For shielding of two horizontal rails located directly above each other with vertical division of the mounting height

### DELIVERY COMPRISES

| Item | Qty | Description |
|---|---|---|
| 1 | 1 | Cover strip, Al, 1 mm |
| 2 | 2 | Contact spring, St, stainless |

### ORDER INFORMATION

| Length HP | Part no. |
|---|---|
| 20 | **24562-520** |
| 28 | **24562-528** |
| 40 | **24562-540** |
| 42 | **24562-542** |
| 63 | **24562-563** |
| 84 | **24562-584** |
| Assembly tool for EMC sealing, St, stainless (horizontal rails),1 piece | **24560-271** |

135485455

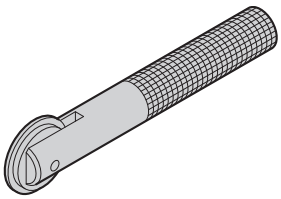

aza45937

Assembly tool

# RatiopacPRO Platform Accessories

## REAR PANELS WITH VENTILATION SLOTS

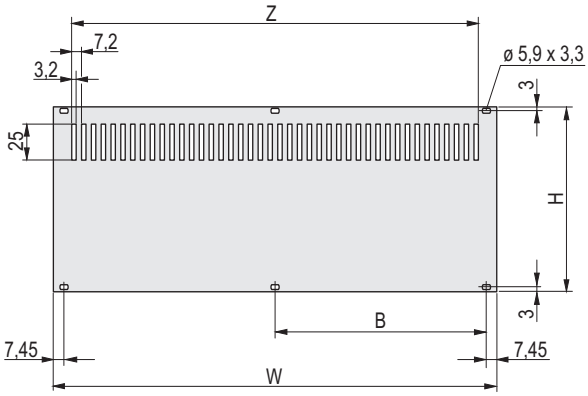


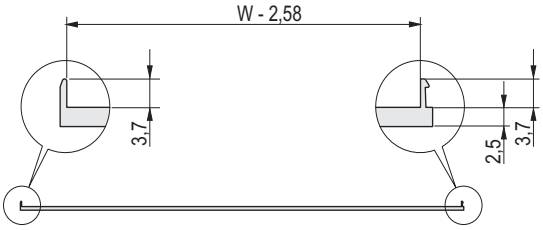


01802055

Shieldable

01804050

Unshielded

- Two versions:
  unshielded, Al, 2.5 mm;
  shieldable, Al extrusion (textile EMC seal, retrofittable)
- Mounting on horizontal rails (top and bottom)

### DELIVERY COMPRISES

| Item | Qty | Description |
|---|---|---|
| 1 | 1 | Rear panel, Al, 2.5 mm, front: anodised, rear: iridescent green chromated; unshielded **(flat)** or shieldable **(U-shaped)** with EMC seal (textile) |

### ORDER INFORMATION

| Height U | H mm | Width W HP | Width W mm | B mm | unshielded Part no. | shieldable Part no. |
|---|---|---|---|---|---|---|
| 2 | 84 | 28 | 141.9 | – | **30849-007** | 20848-679 |
| 2 | 84 | 42 | 213 | 101.6 | **30849-014** | 20848-680 |
| 2 | 84 | 63 | 319.7 | 157.5 | **30849-015** | 20848-681 |
| 2 | 84 | 84 | 426.4 | 208.3 | **30849-016** | 20848-682 |
| 3 | 128.4 | 28 | 141.9 | – | **30849-008** | **20848-633** |
| 3 | 128.4 | 42 | 213 | 101.6 | **30849-021** | 20848-634 |
| 3 | 128.4 | 63 | 319.7 | 157.5 | **30849-022** | 20848-635 |
| 3 | 128.4 | 84 | 426.4 | 208.3 | **30849-023** | **20848-636** |
| 4 | 172.9 | 28 | 141.9 | – | **30849-009** | 20848-656 |
| 4 | 172.9 | 42 | 213 | 101.6 | **30849-028** | 20848-657 |
| 4 | 172.9 | 63 | 319.7 | 157.5 | **30849-029** | 20848-658 |
| 4 | 172.9 | 84 | 426.4 | 208.3 | **30849-030** | 20848-659 |
| 6 | 261.8 | 28 | 141.9 | – | **30849-010** | 20848-640 |
| 6 | 261.8 | 42 | 213 | 101.6 | **30849-035** | **20848-641** |
| 6 | 261.8 | 63 | 319.7 | 157.5 | **30849-036** | 20848-642 |
| 6 | 261.8 | 84 | 426.4 | 208.3 | **30849-037** | **20848-643** |

- Assembly parts see page Chapter 7, Front panels
- Rear/front panels without perforation see Chapter 7, Front panels
- Rear panels with fan available on request

## TEXTILE EMC SEALS

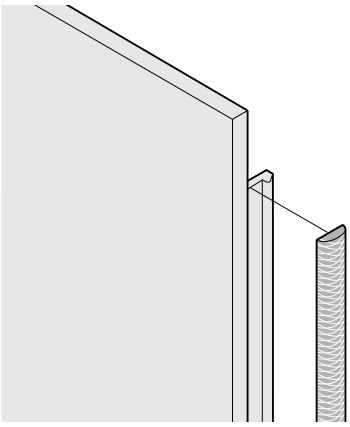

04602054

### DELIVERY COMPRISES

| Item | Qty | Description |
|---|---|---|
| 1 | 10/100 | Textile EMC seal, core: foam, sleeve: textile cladding with CuNi coating |

### ORDER INFORMATION

| Height U | Height mm | Qty/PU pieces | Part no. |
|---|---|---|---|
| 2 | 52 | 10 | **21101-857** |
| 3 | 97 | 100 | **21101-854** |
| 3 | 97 | 10 | **21101-853** |
| 4 | 142 | 10 | **21101-858** |
| 6 | 232 | 100 | **21101-856** |
| 6 | 232 | 10 | **21101-855** |

# RatiopacPRO Platform Accessories

## STAINLESS STEEL EMC GASKET FOR U-SHAPED FRONT PANEL

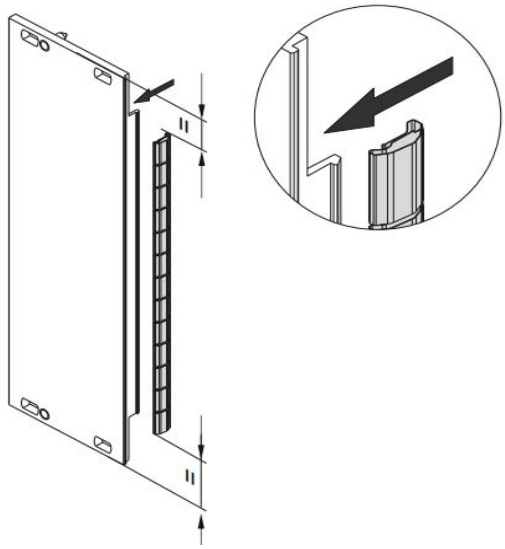

- The stainless steel EMC-gasket for SCHROFF U-shaped front panels, offers excellent performance in shielding effectiveness and an enormous temperature range from -200 to +160°C.
- Easy mounting by clipping the gasket onto the right front panel bracket

NEW

### DELIVERY COMPRISES

| Item | Qty | Description |
|---|---|---|
| 1 | 10/100 | EMC gasket (stainless steel) |

### ORDER INFORMATION

| Height U | Height mm | Qty/PU piece | Part no. |
|---|---|---|---|
| 2 | 52 | 10 | **21102-115** |
| 3 | 97 | 10 | **21102-105** |
| 3 | 97 | 100 | **21102-106** |
| 4 | 142 | 10 | **21102-113** |
| 6 | 232 | 10 | **21102-107** |
| 6 | 232 | 100 | **21102-108** |

**Handschutz benutzen!**
**Use Hand Protection!**
**Utilisez une protection des mains!**

## FRONT PANEL, 1 U, UNSHIELDED, FOR 4 U CASE, FOR MOUNTING ON HORIZONTAL RAILS

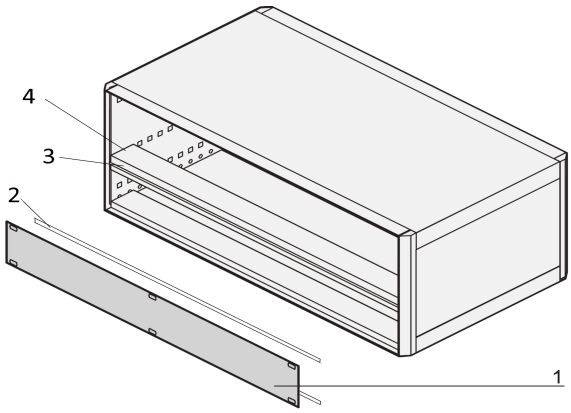


05806064

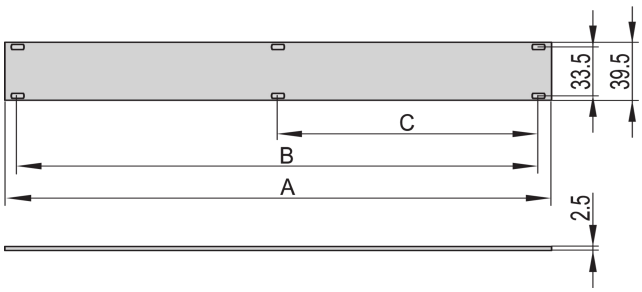


Drawing is only for visualization. Accessories are compliant with RatiopacPRO Style, RatiopacPRO and RatiopacPRO Air

### DELIVERY COMPRISES

| Item | Qty | Description |
|---|---|---|
| 1 | 1 | Front panel, Al, 2.5 mm, front anodised, rear iridescent green chromated |

### ORDER INFORMATION

| Width HP | A mm | B mm | C mm | Front panel Part no. |
|---|---|---|---|---|
| 28 | 141.9 | 127.0 | – | **20850-423** |
| 42 | 213.0 | 198.1 | 101.6 | **20850-424** |
| 63 | 319.7 | 304.8 | 157.5 | **20850-425** |
| 84 | 426.4 | 411.5 | 203.2 | **20850-426** |
| **Accessories** | | | | |
| Pozidrive/slotted collar screw M2.5 x 12.3, St, nickel-plated, PU 100 pieces | | | | **21101-101** |
| Plastic sleeve, PA, grey PU 100 pieces | | | | **21100-464** |

### NOTE

- Please order items 2, 3 and 4 listed below separately

| Width HP | Item 2 EMC gasket, front panel/horizontal rail PU 10 pieces Part no. | Item 3 EMC gasketing kit horizontal rails, 1 piece Part no. | Item 4 Horizontal rail type H-KD, 1 piece (SPQ 10)1) Part no. |
|---|---|---|---|
| 28 | **24560-229** | **24562-528** | **34560-228** |
| 42 | **24560-231** | **24562-542** | **34560-242** |
| 63 | **24560-233** | **24562-563** | **34560-263** |
| 84 | **24560-235** | **24562-584** | **34560-284** |

1) SPQ (standard pack quantity): Order number includes 1 piece, but delivery is exclusively made in standard pack quantity (SPQ); please order at least the SPQ quantity or a multiple thereof

# RatiopacPRO Platform Accessories

## EMC FRONT / REAR PANEL, SCREWLESS, SHIELDED

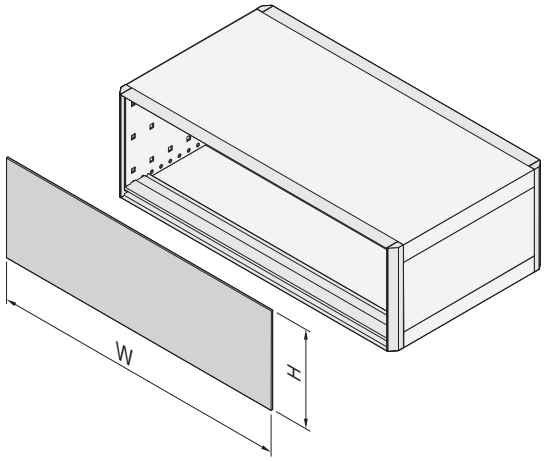


01811055

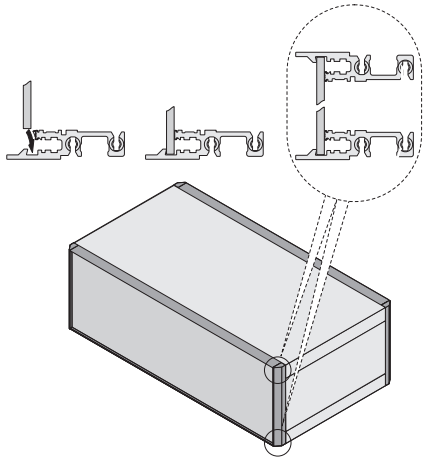

01811056

Front panel/horizontal rail

Drawing is only for visualization. Accessories are compliant with RatiopacPRO Style, RatiopacPRO and RatiopacPRO Air

- **No screws** required for fixing
- Special horizontal rails **(included in screwless case type)** cover the edges of the front panel (top and bottom) and prevent bowing of the front panel

### DELIVERY COMPRISES (Kit)

| Item | Qty | Description |
|---|---|---|
| 1 | 1 | Full-width front panel, Al, 2.5 mm, front: anodised, rear: colour passivated |

Please order the EMC gaskets (textile), the front to side panel gasket kit and the horizontal rail to front panel EMC gasket kit, separatly

### ORDER INFORMATION

| For case height U | Height H mm | For case width HP | Width W mm | Part no. |
|---|---|---|---|---|
| 2 | 84.0 | 28 | 141.9 | 34572-199 |
| 2 | 84.0 | 42 | 213.2 | 34572-200 |
| 2 | 84.0 | 63 | 319.7 | 34572-201 |
| 2 | 84.0 | 84 | 426.4 | 34572-202 |
| 3 | 128.4 | 28 | 141.9 | **34572-203** |
| 3 | 128.4 | 42 | 213.2 | **34572-204** |
| 3 | 128.4 | 63 | 319.7 | **34572-205** |
| 3 | 128.4 | 84 | 426.4 | **34572-206** |
| 4 | 172.9 | 28 | 141.9 | 34572-207 |
| 4 | 172.9 | 42 | 213.2 | 34572-208 |
| 4 | 172.9 | 63 | 319.7 | 34572-209 |
| 4 | 172.9 | 84 | 426.4 | 34572-210 |
| 6 | 261.8 | 28 | 141.9 | 34572-223 |
| 6 | 261.8 | 42 | 213.2 | 34572-224 |
| 6 | 261.8 | 63 | 319.7 | 34572-225 |
| 6 | 261.8 | 84 | 426.4 | 34572-226 |

### NOTE

To obtain a shielded case, all EMC sealings must be fitted (front panel/rear panel - side panel; side panel - cover plate; front panel/rear panel - horizontal rail; horizontal rail - horizontal rail)

REMARK:

Please order the EMC gaskets (textile) separatly

Flat front panels, EMC front panels (flat with groove for EMC gasket) or U-shaped (for textile gasket) you will find in chapter 7.

All need accessories (sleeves, collar screws, etc.) you will find as well in chapter 7.

## EARTHING KIT

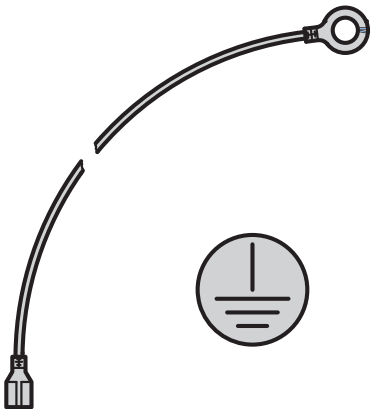

aza43284

- Forms the GND/earthing connections between side panels, base plate, top cover and rear panel
- Protective GND/earthing connections in accordance with:
  - DIN EN 50178/VDE 0160
  - DIN EN 62368-1/VDE 0805
  - DIN EN 61010-1/VDE 0411 part 1
  - DIN EN 61010-1A2/VDE 0411 part 1/A1
- VDE tested

### ORDER INFORMATION

| Description | Part no. |
|---|---|
| GND/earthing kit, Cu wire 1.5 $mm^2$, PVC sleeve, green/yellow | **24571-380** |

# RatiopacPRO Platform Accessories

## AIR FILTERS FOR RatiopacPRO Style

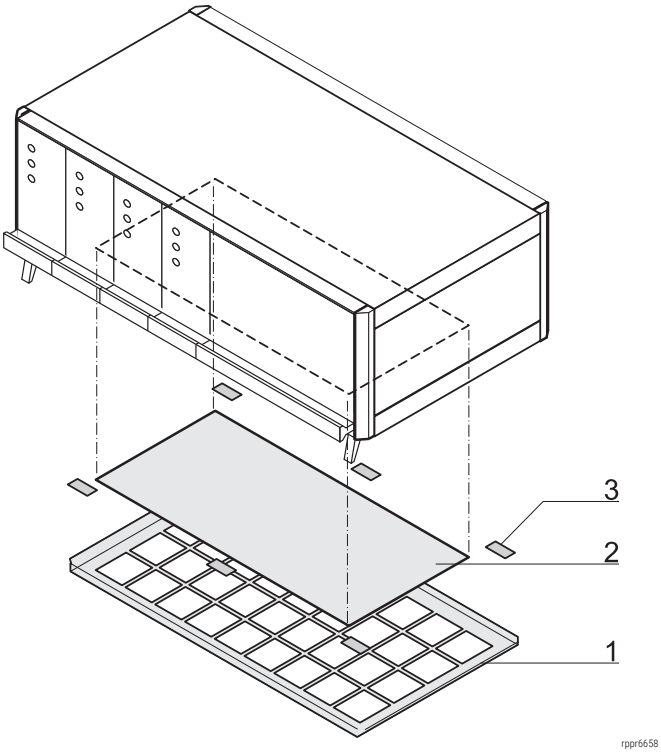


Drawing is only for visualization. Accessories are compliant with RatiopacPRO Style, RatiopacPRO and RatiopacPRO Air

- Retrofit mounting without reworking and tools
- Filter replacement without opening the case, IP protection retained

### DELIVERY COMPRISES (kit)

| Item | Qty | Description |
|---|---|---|
| 1 | 1 | Filter holder, Al, 1 mm, powder-coated, RAL 9006 |
| 2 | 1 | Filter mat, synthetic fibre |
| 3 | 1 | Self-adhesive fixings |

### ORDER INFORMATION

| For case width | Air filter | Replacement filter 1 piece |
|---|---|---|
| HP | Part no. | Part no. |
| 28 | **24571-325** | **64571-033** |
| 42 | **24571-326** | **64571-034** |
| 63 | **24571-327** | **64571-035** |
| 84 | **24571-328** | **64571-036** |

## AIR BAFFLE FOR SLOTS

### ORDER INFORMATION

| | Air baffle without front panel | Air baffle with front panel U front panel for textile EMC gasket |
|---|---|---|
| 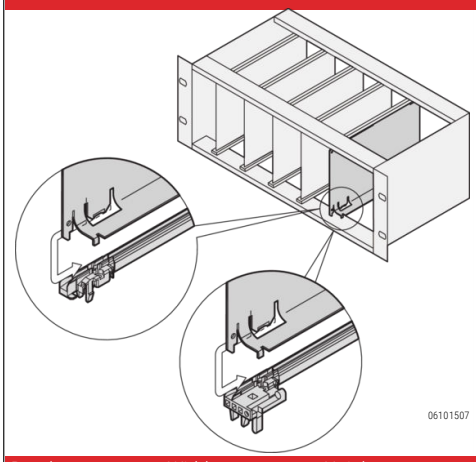 06101507 | 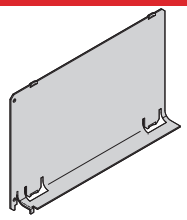 06108085 Al, 1 mm, incl. assembly kit; prevents an air short circuit in unoccupied slot positions; is pushed into the groove of the guide rails | 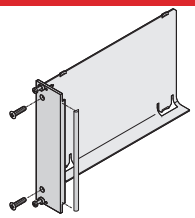 06108088 Air deflector, Al, 1 mm, front panel, Al extrusion, 2.5 mm, front anodised, rear conductive; EMC gasket (textile); fixing material kit prevents an air short-circuit where slots are unoccupied; is pushed into the groove of the guide rails |

| Depth mm | Width HP | Height U | 1 piece | 1 piece |
|---|---|---|---|---|
| 160 | 4 | 3 | **34562-823** | **20848-728** |
| 160 | 4 | 6 | **34562-826** | **20848-736** |
| 220 | 4 | 3 | **34562-824** | 20848-729 |
| 220 | 4 | 6 | 34562-827 | 20848-737 |

### NOTE

- Air baffle for other dimensions for example 280 mm deep, or 8 HP and 12HP width
  or for 80 mm rear I/O boards available on request

# RatiopacPRO Platform Accessories

## MOUNTING POSITION RatiopacPRO Style HORIZONTAL RAILS / CENTRAL RAILS

front middle rear

Drawing are only for visualization. Accessories are compliant with RatiopacPRO Style, RatiopacPRO and RatiopacPRO Air

**2 U**

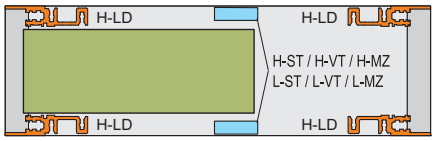


**3 U**

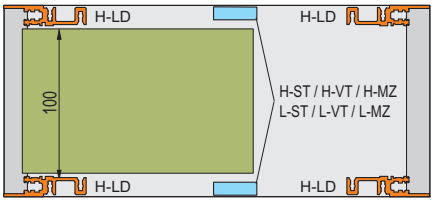


01802057

**4 U (3 U + 1 U)**

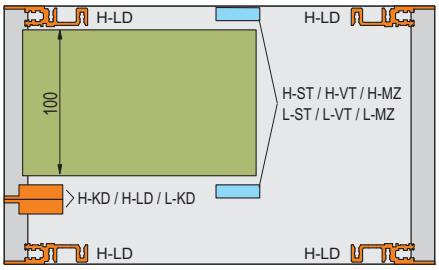


**6 U**

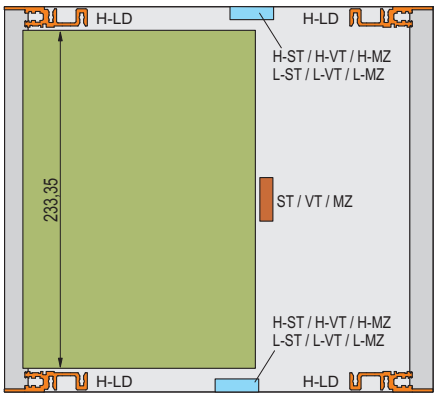


01802059

**6 U (2 x 3**

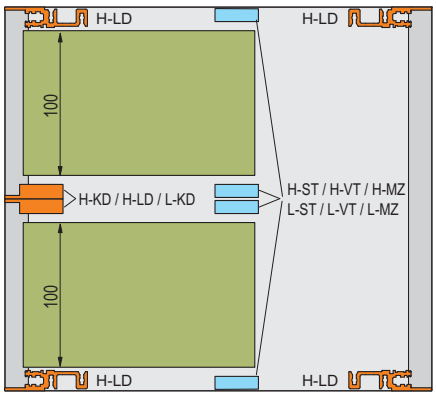


01802060

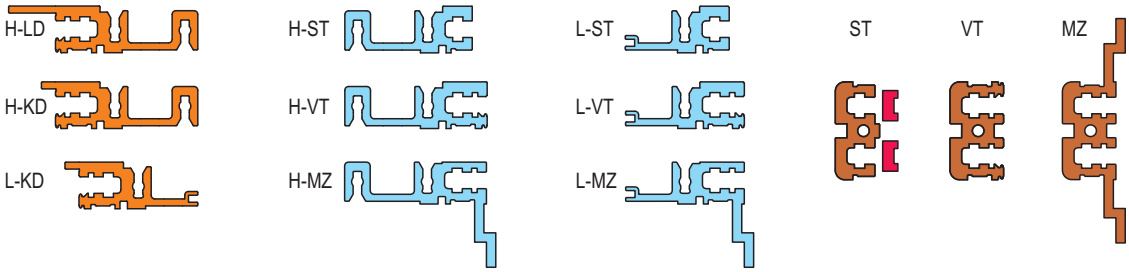


Horizontal rails can be bolted on in 15 mm depth grid

01808050

# RatiopacPRO Platform Accessories

## FRONT HORIZONTAL RAILS

### ORDER INFORMATION

| | | With short lip | With long lip for insertion/extraction of CompactPCI and VME64x boards |
|---|---|---|---|
| 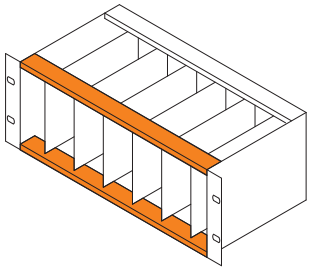 bza44980 | | "heavy"<br>Type H-KD<br>short lip<br> 06197008<br>Al extrusion, anodised finish, contact surface conducting, with printed HP markings | "heavy"<br>Type H-LD<br>long lip<br> 06197009<br>Al extrusion, anodised finish, contact surface conducting, with printed HP markings |
| Usable length HP | Length mm | 1 piece (SPQ 10)[1] | 1 piece (SPQ 10)[1] |
| 28 | 147.32 | **34560-228** | **34560-328** |
| 42 | 218.44 | **34560-242** | **34560-342** |
| 63 | 325.12 | **34560-263** | **34560-363** |
| 84 | 431.80 | **34560-284** | **34560-384** |
| M4 × 14, St, zinc-plated, PU 100pcs | | **24571-371** | **24571-371** |
| M4 × 10, St, zinc-plated, necessary if guide rail is screwed to slot 1, PU 100 pieces | | **24571-372** | **24571-372** |

Threaded inserts see page 5.170 5.170

1) SPQ (standard pack quantity): Order number includes 1 piece, but delivery is exclusively made in standard pack quantity (SPQ); please order at least the SPQ quantity or a multiple thereof

Horizontal rail type "heavy": loading capacity > 7.5 kg

# RatiopacPRO Platform Accessories

## REAR HORIZONTAL RAILS

### ORDER INFORMATION

| | | For indirect backplane fixing with insulation strip | For direct backplane fixing | For direct fixing of connectors to EN 60603-2 (DIN 41612) |
|---|---|---|---|---|
| 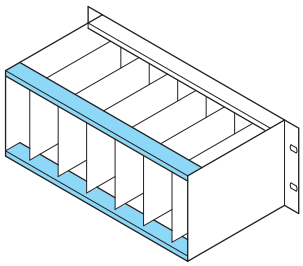 06105074 | | 04400001 "heavy" Type H-ST standard 06197011 Al extrusion, anodised finish, contact surface conducting, with printed HP markings | 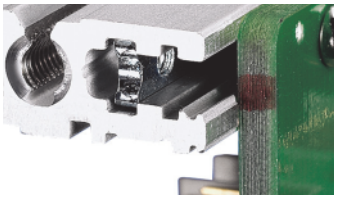 04400002 "heavy" Type H-VT long lip 06197013 Al extrusion, anodised finish, contact surface conducting, with printed HP markings | 04400003 "heavy" Type H-MZ with Z-rail 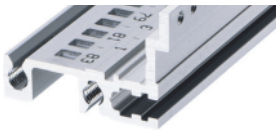 06197015 Al extrusion, anodised finish, contact surface conducting, with printed HP markings |
| Usable length HP | Length mm | 1 piece (SPQ 10)[1] | 1 piece (SPQ 10)[1] | 1 piece (SPQ 10)[1] |
| 28 | 147.32 | **34560-528** | **34560-728** | **34560-928** |
| 42 | 218.44 | **34560-542** | **34560-742** | **34560-942** |
| 63 | 325.12 | **34560-563** | **34560-763** | **34560-963** |
| 84 | 431.80Torx | **34560-584** | **34560-784** | **34560-984** |
| Torx panhead screw, 4 x 14, 100pcs | | **24571-371** | **24571-371** | **24571-371** |
| Torx panhead screw, 4 x 10, 100pcs | | **24571-372** | **24571-372** | **24571-372** |
| Perforated rail for connector mounting with insulation strip see page | | 5.170 | – | – |
| Z-rail for connector mounting without insulation strip see page | | 5.170 | – | – |
| Insulation strips see page | | 5.170 | – | – |
| Threaded inserts see page | | 5.170 | 5.170 | 5.170 |

1) SPQ (standard pack quantity): Order number includes 1 piece, but delivery is exclusively made in standard pack quantity (SPQ); please order at least the SPQ quantity or a multiple thereof

Horizontal rail type "heavy": loading capacity > 7.5 kg

# RatiopacPRO Platform Accessories

## HORIZONTAL RAILS REAR, CENTRE

### ORDER INFORMATION

| | | For indirect mounting of backplanes via insulation strip | For direct backplane mounting | For direct fixing of connectors to EN 60603-2 (DIN 41612) |
|---|---|---|---|---|
| 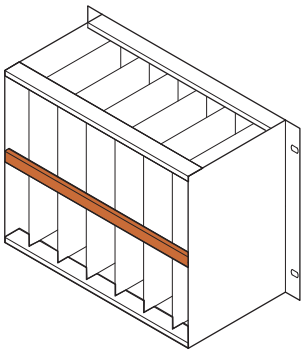 06108090 | | 04400001 Type ST 06197016 Al extrusion, finish anodised, conductive contact surface; horizontal rail type AB (AB = support) is required to fix the 80 mm rear I/O boards; without marking | 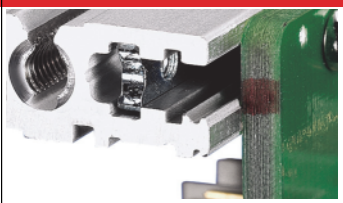 04400002 Type VT 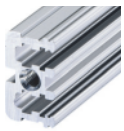 06197017 Al extrusion, finish anodised, conductive contact surface; horizontal rail type AB (AB = support) is required to fix the 80 mm rear I/O boards; without marking | 04400003 Type MZ 06197018 Al extrusion, finish anodised, conductive contact surface; horizontal rail type AB (AB = support) is required to fix the 80 mm rear I/O boards; without marking |
| Usable length HP | Length mm | 1 piece (SPQ 10)[1] | 1 piece (SPQ 10)[1] | 1 piece (SPQ 10)[1] |
| 28 | 147.32 | **34561-028** | **34561-128** | **34561-228** |
| 42 | 218.44 | **34561-042** | **34561-142** | **34561-242** |
| 63 | 325.12 | **34561-063** | **34561-163** | **34561-263** |
| 84 | 431.80 | **34561-084** | **34561-184** | **34561-284** |
| Torx panhead screw, 4 x 14, 100 pcs | | **24571-371** | **24571-371** | **24571-371** |
| Torx panhead screw, 4 x 10, 100 pcs | | **24571-372** | **24571-372** | **24571-372** |
| Insulation strips see page | | 5.170 | – | – |
| Threaded inserts see page | | 5.170 | 5.170 | 5.170 |

1) SPQ (standard pack quantity): Order number includes 1 piece, but delivery is exclusively made in standard pack quantity (SPQ); please order at least the SPQ quantity or a multiple thereof

# RatiopacPRO Platform Accessories

## HORIZONTAL RAILS (TYPE AB) FOR REAR I/O GUIDE RAILS

### ORDER INFORMATION

| | For CompactPCI in rear I/O area |
|---|---|
| 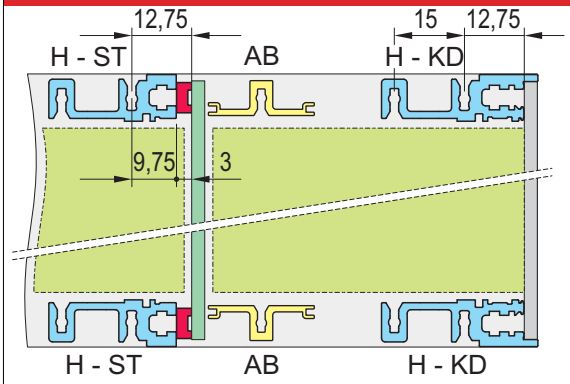  | 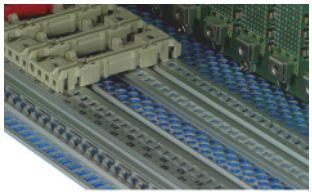 06108009<br>Type AB<br> 06197019<br>Al extrusion, finish anodised, conductive contact surface; horizontal rail type AB (AB = support) is required to fix the 80 mm rear I/O boards; without marking |

| Usable length HP | Length mm | 1 piece (SPQ 10)[1] |
|---|---|---|
| 20 | 106.68 | **34561-520** |
| 28 | 147.32 | **34561-528** |
| 40 | 208.28 | **34561-540** |
| 42 | 218.44 | **34561-542** |
| 63 | 325.12 | **34561-563** |
| 84 | 431.80 | **34561-584** |
| – | 1000.00 | **34561-501** |
| Screw, M4 x 14, PU 100 pieces, for fastening horizontal rail to side panel | | **24571-371** |

1) SPQ (standard pack quantity): Order number includes 1 piece, but delivery is exclusively made in standard pack quantity (SPQ); please order at least the SPQ quantity or a multiple thereof

### NOTE

- All AB type horizontal rails without print
- 1000 mm version without M4 thread in end

# RatiopacPRO Platform Accessories

## THREADED INSERTS, PERFORATED STRIPS, INSULATION STRIPS

| | Threaded insert M2.5 | | Threaded insert M3 | Perforated strip (item 1) | | Insulation strip | |
|---|---|---|---|---|---|---|---|
| | 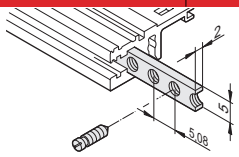 06103056 Required for fixing the front panel to the horizontal rail; St, zinc-plated; use collar screw 12.3 mm, see page 6.66 | | | 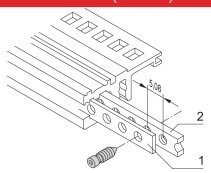 127685783 For centring shielded plug-in units, Al, 1 mm, please order fixing grub screw (torque 0,37Nm) separately | | 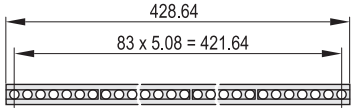 BZ6749 For insulated mounting of backplane; PC, UL 94 V-0, grey | |
| Usable length HP | Length mm | M2.5 1 piece (SPQ 10)[1] | M3 1 piece (SPQ 10)[1] | Length | 1 piece (SPQ 10)[1] | Length mm | PU 10 pieces[2] |
| 28 | 146.82 | **34561-328** | – | 147.12 | **30845-197** | 144.20 | **24560-828** |
| 42 | 217.94 | **34561-342** | – | 218.24 | **30845-211** | 210.40 | **24560-842** |
| 63 | 324.62 | **34561-363** | – | 324.92 | **30845-232** | 316.88 | **24560-863** |
| 84 | 431.30 | **34561-384** | **34561-484** | 431.60 | **30845-253** | 428.64 | **24560-884** |
| **Accessories** | | | | | | | |
| Grub screw M2.5 x 8, PU 100 pieces | | **21100-276** | – | | – | | – |
| Grub screw M2.5 x 9, PU 100 pieces | | – | – | | **21102-980** | | – |
| Grub screw M3 x 8, PU 100 pieces | | – | **21100-646** | | – | | – |

1) SPQ (standard pack quantity): Order number includes 1 piece, but delivery is exclusively made in standard pack quantity (SPQ); please order at least the SPQ quantity or a multiple thereof

2) Part no. includes one packing unit (PU); delivery is exclusively made in PU

## Z-RAILS, PERFORATED RAILS

| | | Z-rail for connectors DIN EN 60603-2, DIN 41612 item 1 | Z-rail for connectors 31-pin, DIN 41617 | Perforated rail EN 606032, DIN 41612 item 1 |
|---|---|---|---|---|
| | | 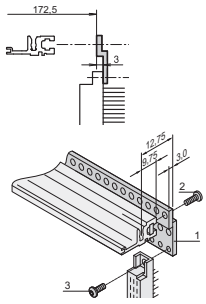 BZA45849 06708063 For connector mounting with ST horizontal rails, please order threaded insert and screw separately | 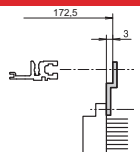 BZA45850 For connector mounting with ST horizontal rails, please order threaded insert and screw separately | 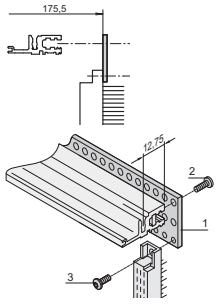 BZA45848 06708051 For connector mounting with VT horizontal rails, please order threaded insert and screw separately |
| Usable length HP | Length mm | 1 piece | 1 piece | PU 4 pieces |
| 4 | 20.32 | **30822-166** | – | **20822-052** |
| 8 | 40.64 | **30822-170** | – | **20822-053** |
| 20 | 101.60 | **30822-025** | – | **20822-051** |
| 28 | 142.24 | **30822-033** | – | **20822-049** |
| 40 | 203.20 | **30822-045** | **30819-763** | **20822-046** |
| 42 | 213.36 | **30822-047** | – | **20822-050** |
| 60 | 304.80 | **30822-065** | **30819-783** | **20822-047** |
| 84 | 426.72 | **30822-089** | **30819-808** | **20822-048** |
| Item 2, torx panhead screw to fix connector to perforated rail,, M2.5 x 7, PU 100 pieces | | **24560-147** | **24560-147** | **24560-147** |
| Item3, torx panhead screw, to fix perforated rails to horizontal rail, M2.5 x 10, PU 100 pieces | | – | – | **24560-148** |

# RatiopacPRO Platform Accessories

## TORX PANHEAD SCREWS

### ORDER INFORMATION

| | Description | Application | Material | Dimension | Qty/PU | Part no. |
|---|---|---|---|---|---|---|
| | Panhead screw with Torx | For horizontal rail to side panel, with GND/earthing function | St, zinc-plated | M4 x 14 | 100 | **24571-371** |
| | Panhead screw with Torx | For horizontal rail to side panel, if guide rail is bolted onto slot 1 | St, zinc-plated | M4 x 10 | 100 | **24571-372** |
| | Countersunk screw with Torx | For fixing the top covers to the case frame | St, zinc-plated | M4 x 14 | 100 | **24571-373** |

## NUT

| | | Application | Material | Dimension | Qty/PU | Part no. |
|---|---|---|---|---|---|---|
| | Square nut | For fixing: parts to side panels, support profiles, mounting plates | St, zinc-plated | M4 | 100 | **24560-140** |

## ASSEMBLY TOOLS

### ORDER INFORMATION

### ORDER INFORMATION

| | Description | Application | Dimension | Qty/PU | Part no. |
|---|---|---|---|---|---|
| 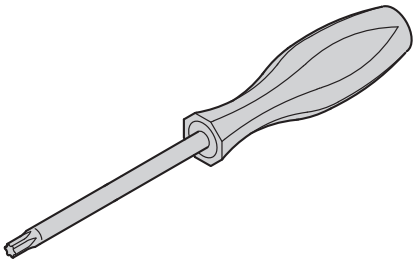 AZA45925 | Torx screwdriver | | T8 | 1 | **64560-026** |
| | | | T20 | 1 | **64560-027** |
| 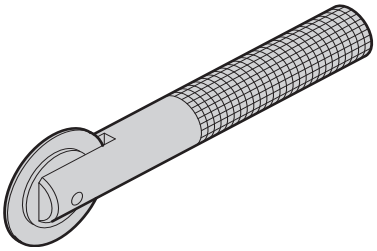 aza45938 | Assembly tool for horizontal rails | Exclusively to fix stainless steel EMC gaskets in horizontal rails | – | 1 | **24560-271** |
| 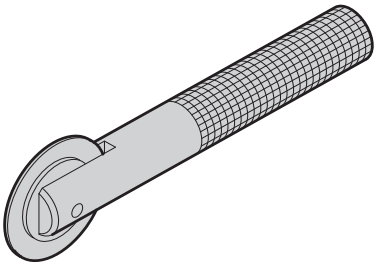 aza45937 | Assembly tool for front panels | For mounting stainless steel EMC contact strips on front panels with lateral slot | – | 1 | **24560-270** |

# RatiopacPRO Platform Accessories

## DIVIDER PLATES

### ORDER INFORMATION

| | | | | | Divider plates | |
|---|---|---|---|---|---|---|
| | | | | | Mounting position for stainless steel EMC gasket | Mounting position for textile EMC gasket |
| 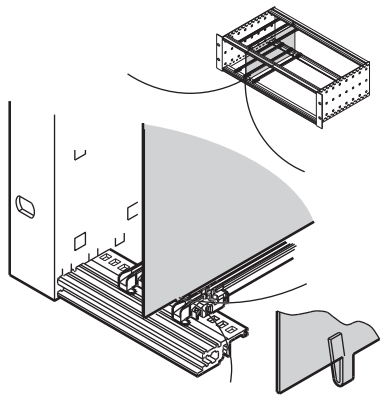 bpa45912 | | | | | 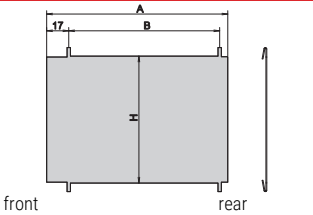  Stainless steel, 1 mm, is mounted by clipping onto horizontal rail, space requirement on component side 2 mm; mounting direction varies with shielding design (EMC stainless steel or textile gasket); retrofitting the divider plate in an already-assembled subrack/ case will first require dismantling of the horizontal rails; where front panels are unshielded, both mounting directions are possible | 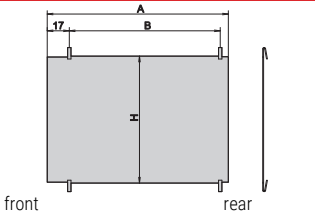  |
| Height<br>U | Depth<br>mm | A<br>mm | B<br>mm | H<br>mm | 1 piece | |
| 3 | 160 | 158.3 | 135.0 | 113.5 | **34562-761** | |
| 3 | 220 | 218.3 | 195.0 | 113.5 | **34562-762** | |
| 6 | 160 | 158.3 | 135.0 | 246.9 | **34562-763** | |
| 6 | 220 | 218.3 | 195.0 | 246.9 | **34562-764** | |

# RatiopacPRO Platform Accessories

## MOUNTING PLATES

### ORDER INFORMATION

| | | | Mounting plate, total width | Mounting plate, partial width |
|---|---|---|---|---|
| 06812002 | | | 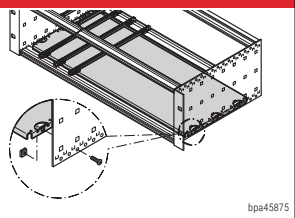 bpa45875<br>Al, 1.5 mm;<br>Please order mounting kit for total width separtely<br>Torque Moment: 1.5Nm | 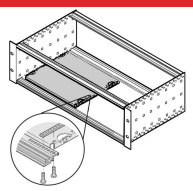 <br>Al, 1.5 mm;<br>Please order mounting kit for partial width separtely<br>Torque Moment: 1.5Nm and 0,37Nm |
| Width HP | Width (W) mm | Board lengths mm | 1 piece | 1 piece |
| 28 | 146.88 | 160 | **34562-745** | **34562-745** |
| 28 | 146.88 | 220 | **34562-749** | **34562-749** |
| 28 | 146.88 | 280 | **34562-753** | **34562-753** |
| 28 | 146.88 | 340 | **34562-757** | **34562-757** |
| 42 | 217.99 | 160 | **34562-746** | **34562-746** |
| 42 | 217.99 | 220 | **34562-750** | **34562-750** |
| 42 | 217.99 | 280 | **34562-754** | **34562-754** |
| 42 | 217.99 | 340 | **34562-758** | **34562-758** |
| 63 | 324.67 | 160 | **34562-747** | **34562-747** |
| 63 | 324.67 | 220 | **34562-751** | **34562-751** |
| 63 | 324.67 | 280 | **34562-755** | **34562-755** |
| 63 | 324.67 | 340 | **34562-759** | **34562-759** |
| 84 | 431.35 | 160 | **34562-748** | – |
| 84 | 431.35 | 220 | **34562-752** | – |
| 84 | 431.35 | 280 | **34562-756** | – |
| 84 | 431.35 | 340 | **34562-760** | – |
| 84 | 431.35 | 400 | **34562-870** | – |
| 84 | 431.35 | 460 | **34562-871** | – |
| **Assembly kit for mounting plate, total width**<br>PU 1 kit (Torx countersunk screw M4 x 5, St, zinc-plated, 16 pieces; screw M4 x 6, St, zinc-plated, 14 pieces; M4 square nut, St, zinc-plated, 14 pieces) | | | **24560-184** | – |
| **Assembly kit for mounting plate, partial width**<br>2 x St, threaded inserts 13HP, 5,0 x 2,0 mm, zinc plated; M2,5mm, 6 x screw M2,5x6, (0,37Nm)<br>5 x square nut M4, 5 x screw M4x6 (1,5Nm)<br>1 x User manual | | | – | **24560-127** |

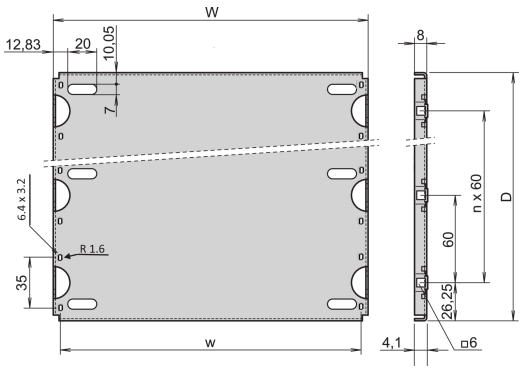

06103057

### NOTE

- Please order fixing material for assembly of mounting plate separately
- A guide rail can be mounted on the first and last slot position
- 4.4" and "reinforced" guide rails cannot be used

Drawing is only for visualization. Accessories are compliant with RatiopacPRO Style, RatiopacPRO and RatiopacPRO Air

# RatiopacPRO Platform Accessories

## HORIZONTAL BOARD INSTALLATION

### ORDER INFORMATION

| | | | Horizontal board installation | | |
|---|---|---|---|---|---|
| | | | Board cage | Front frame for EMC shielding | Front frame, unshielded |
| 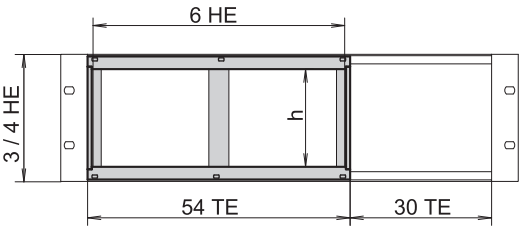  | | | 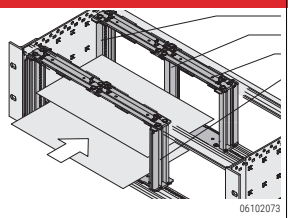  Struts die-cast zinc; horizontal rails front and rear; threaded insert, St, zinc-plated; fixing material kit; for horizontal mounting of double-height euroboards in 3 or 4 U high subracks/cases; 54 TE space required; **please order front frame for EMC shielding separately** | 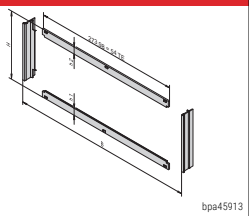  2 horizontal covers, Al, 2.5 mm, front anodised, rear iridescent green chromated; 2 vertical trims, Al extrusion, clear passivated; stainless steel EMC gasket; front frame forms the contact between subrack and the sub-assemblies | 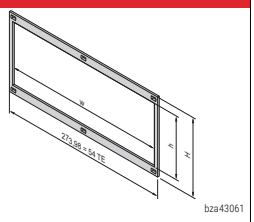  Al, 2.5 mm, clear anodised; front frame with cut-out, clear internal width w = 266.35 mm |
| Height U | Usable height h HP | Other dimensions and options<br>Horizontal rail, front / Horizontal rail, rear | PU 1 kit | PU 1 kit | 1 piece |
| 3 | 20 | | **24564-117** | **24564-109** | 34564-108 |
| 3 | 20 | | **24564-118** | **24564-109** | 34564-109 |
| 4 | 28 | | **24564-217** | **24564-209** | **34564-208** |
| Assembly tool, for mounting the EMC gasket (stainless steel) | | 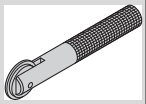 | – | **24560-270** | – |

* For direct backplane mounting

### NOTE

- Please order front frame separately

# RatiopacPRO Platform Accessories

## COMBINED MOUNTINGS (6 U AND 2 X 3 U ONE ABOVE THE OTHER)

### ORDER INFORMATION

| | Combined mounting<br>Horizontal and vertical subdivision (incl. front panel for stainless steel EMC gasket) | Alternative front panels for combined mounting<br>Unshielded front panel, 6 U, 2 HP<br>item 6 | <br>Front panel for textile EMC gasket, 6 U, 2 HP<br>item 6 | Splitting extrusion<br>For combined mounting<br>Item 2 |
|---|---|---|---|---|
| 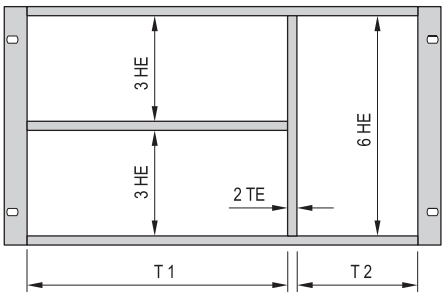 | 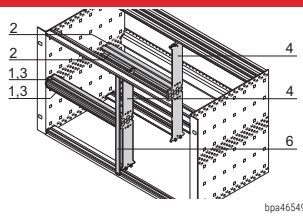 <br>Item 1: 2 front horizontal rails (H-KD), Al extrusion, anodised;<br>item 2: 2 rear horizontal rails (AB), Al extrusion, anodised; item 3: threaded insert, St, zinc-plated;<br>item 4: Zn diecast support member;<br>item 6: front panel 2 HP, 6 U, shielded; with EMC stainless steel gasket (84:0 without items 4, 6) | 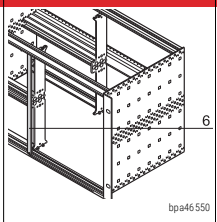 <br>Al, 2.5 mm, front anodised, rear iridescent green chromated | 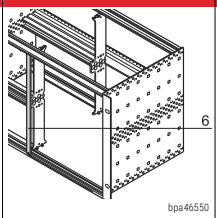 <br>Al, 2.5 mm, U-profile with notch, 6 U, 2 HP | 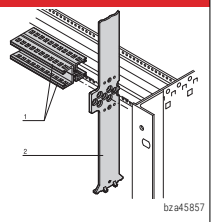 <br>6 U, die-cast zinc; splitting extrusion is inserted in the grid holes of the horizontal rail; the splitting extrusion can be bolted |
| Width pitch T1:T2<br>HP | PU 1 kit | 1 (SPQ 5) | 1 piece (SPQ 5)[1] | 1 piece |
| 20:62 | **24562-420** | | | |
| 40:42 | **24562-440** | | | |
| 42:40 | **24562-442** | **30847-472** | **30849-140** | **64560-010** |
| 63:19 | **24562-463** | | | |
| 84:0 | **24562-484** | | | |
| Countersunk screw with Torx<br>M4 x 14, zinc-plated, PU 100 pieces<br>fixing splitting extrusion/horizontal rail | – | – | – | **24560-145** |
| Panhead screw<br>M2.5 x 10, St, zinc-plated, PU 100 pieces<br>fixing horizontal rail/splitting extrusion | – | – | – | **24560-179** |
| Pozidrive/slotted collar screw<br>M2.5 x 12.3, St, nickel-plated, PU 100 pieces | – | **21101-101** | **21101-101** | – |
| Pozidrive/slotted collar screw<br>M2.5, black, zinc-plated, PU 100 pieces | – | **21101-102** | **21101-102** | – |
| Washer, 2.7 x 5 x 1, plastic PA 6, PU 100 pieces | – | **21101-121** | **21101-121** | – |
| Textile gasket, core: foam,<br>sleeve: textile cladding with CuNi coating,<br>UL 94 V-0, PU 10 pieces | – | – | **21101-855** | – |

1) SPQ (standard pack quantity): Order number includes 1 piece, but delivery is exclusively made in standard pack quantity (SPQ); please order at least the SPQ quantity or a multiple thereof

- Subdivision of the 6 U assembly area into:
  - 2 x 3 U
  - 1 x 6 U
- Designed to accept Euroboards (100 mm high) and double Euroboards (233.35 mm high)

### NOTE

- Please order EMC gasketing kit for horizontal rails separately, see page 5.160
- Please order perforated strips for horizontal rails separately, see page 5.170
- Please order rear centre horizontal rail separately, see page 5.168

# RatiopacPRO Platform Accessories

## GUIDE RAILS FOR PLUG-IN UNITS AND MODULES, ONE-PIECE, GROOVE WIDTH 2 MM AND 2.5 MM

### ORDER INFORMATION

| | | | For plug-in units and frame type plug-in units<br>Standard | With DIN connector fixing as standard |
|---|---|---|---|---|
| **Assembly**<br>- can be clipped into Al extruded horizontal rails<br>- can be clipped into 1.5 mm sheet metal<br><br>**Storage temperature**<br>from -40 °C ... 130 °C | | | 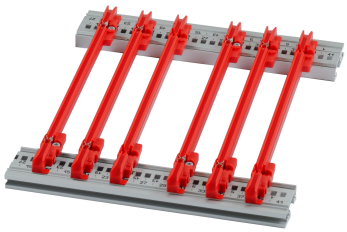 <br>Up to 220 mm length, PC, UL 94 V-0;<br>from 280 mm length, multi-piece,end piece PC, UL 94 V-0,<br>central section Al extrusion | 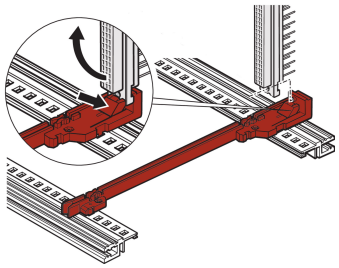 <br>PBT, UL 94 V-0, red,<br>connector is clipped directly onto the guide rails;<br>for euroboards 100 x 160 mm or 100 x 220 mm only<br>06101501 |
| Board lengths<br>mm | Groove width<br>mm | Colour<br>mm | PU 10 pieces[2] | 1 pair (SPQ 10)[1] |
| 70 | 2 | red | – | – |
| 70 | 2 | grey | – | – |
| 160 | 2 | red | **24568-361** | **64560-074** |
| 220 | 2 | red | **24568-362** | **64560-075** |
| 280 | 2 | red | **24568-379** | – |
| 340 | 2 | red | **24568-380** | – |
| 160 | 2.5 | red | – | – |
| 220 | 2.5 | red | – | – |

### Accessories

| | |
|---|---|
| Retention screw, PU 100 pieces 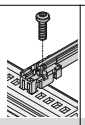 | **24560-141** |
| ESD clip, PU 50 pieces | **24560-255** |

1) SPQ (standard pack quantity): Order number includes 1 piece, but delivery is exclusively made in standard pack quantity (SPQ); please order at least the SPQ quantity or a multiple thereof
2) Part no. includes one packing unit (PU); delivery is exclusively made in PU

**Description of accessories see from page 6.43 in the EuropacPRO catalog**

# RatiopacPRO Platform Accessories

## GUIDE RAILS TYPE "ACCESSORIES", ONE-PIECE, GROOVE WIDTH 2 MM AND 2.5 MM

### ORDER INFORMATION

| | | | Guide rail type "Accessories" | "Accessories" strengthened | For heavy modules, Al extrusion, silver, robust version |
|---|---|---|---|---|---|
| **Assembly**<br>- can be clipped into horizontal rails in Al extrusion<br>- can be clipped into 1.5 mm sheet metal<br><br>**Storage temperature**<br>from -40 °C ... +130 °C | | | <br>Up to 220 mm length, PC, UL 94 V-0;> 280 mm length, multi-piece,end piece PC, UL 94V-0,<br>middle section Al extrusion | <br>PC UL 94V-0, red; supportbeam of guide rails adds to strengthening (reinforced) | <br>Al extrusion; is screwed to horizontal rail "heavy" with retention screws |
| Board lengths mm | Groove width mm | Colour mm | PU 10 pieces[2)] | 1 piece (SPQ 50)[1)] | 1 piece (SPQ 10)[1)] |
| 100 | 2 | red | – | – | – |
| 160 | 2 | red | **24568-363** | **64568-076** | – |
| 160 | 2 | grey | – | – | **34562-881** |
| 220 | 2 | red | **24568-364** | **64568-078** | – |
| 220 | 2 | grey | – | – | **34562-882** |
| 280 | 2 | red/silver | **24568-381** | **64568-080** | **34562-883** |
| 340 | 2 | red/silver | **24568-382** | – | **34562-884** |
| 400 | 2 | red/silver | – | – | **34562-885** |
| 160 | 2.5 | red/silver | – | **64568-118** | **34564-881** |
| 220 | 2.5 | red/silver | – | **64568-119** | **34564-882** |
| 280 | 2.5 | red/silver | – | **64568-120** | **34564-883** |
| 340 | 2.5 | silver | – | – | **34564-884** |
| 400 | 2.5 | silver | – | – | **34564-885** |

### Accessories

| | | | |
|---|---|---|---|
| Retention screw, PU 100 pieces 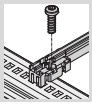 | **24560-141** | **24560-141** | **24560-157** |
| ESD clip, PU 50 pieces | **24560-255** | | – |
| Board locking C, red, PU 10 pieces | **24560-377** | | – |
| Board handle C, red, PU 10 piecesdescription | **24560-378** | | – |
| Identification strips for board handle, red, PU 1 sheet = 438 pieces | **60817-228** | | – |
| Keying / coding peg, see page | 5.176 | | – |

1) SPQ (standard pack quantity): Order number includes 1 piece, but delivery is exclusively made in standard pack quantity (SPQ); please order at least the SPQ quantity or a multiple thereof

2) Part no. includes one packing unit (PU); delivery is exclusively made in PU

**Description of accessories see from page 6.43 in the EuropacPRO catalog**

# RatiopacPRO Platform Accessories

## GUIDE RAIL ACCESSORIES

### ORDER INFORMATION

| | | ESD clips, CompactPCI/VME 64 | Coding for subracks | |
|---|---|---|---|---|
| | | | Keying/coding block for guide rails accessory type<br>red, RAL 3000, grey, RAL 7016 | Keying/coding for CompactPCI, VME64x handles to IEEE 1011.10 and IEC 60297-3-103 |
| | | 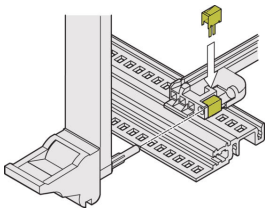 <br>108230497<br>Spring steel, tin-plated, ESD clip, for alignment pin in accordance with IEEE; can be plugged into the guide rails with coding and into the keying/coding block; provides conductive contact between the alignment pin of the insertion/extractor handle (IEL or IET handle) and the horizontal rail | 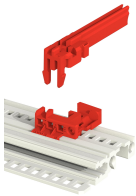 <br>121894752<br> 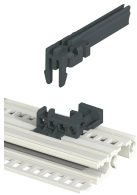 <br>136815562<br>PC, UL 94 V-0, keying/coding block is clipped into the horizontal rail next to the guide rail; please order keying/coding pegs separately | 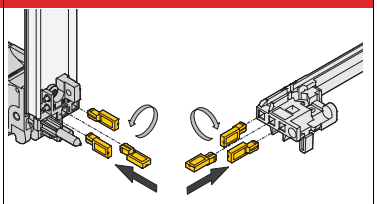 <br>135276437<br>Keying/coding peg, PC, UL 94 V-0, RAL 7035The keying/coding pegs prevent plug-in units to be mounted in wrong slots. They are inserted in the chambers of the codable card guides as well as in the insertion/extractor handles IEL or IET (4 possible positions), resulting in 64 codings per card guide; when coding the upper and lower card guide, 4096 codings will result; |
| Assembly | Colour | PU 50 pieces | 1 piece (SPQ 50)<br>red, RAL 3000, grey, RAL 7016 | PU 100 pieces |
| above | red | – | **64568-232** | – |
| | grey | – | **64568-233** | **20817-501** |
| | silver | **24560-256** | – | – |
| below | red | – | **64568-234** | – |
| | grey | – | **64568-235** | **20817-501** |
| | silver | **24560-256** | – | – |

1) SPQ (standard pack quantity): Part number includes 1 piece, but delivery is exclusively made in standard pack quantity (SPQ); please order at least the SPQ quantity or a multiple

2) Part no. includes one packing unit (PU); delivery is exclusively made in PU

## GUIDE RAIL ACCESSORIES

### ORDER INFORMATION

| | ESD clips for guide rails | Board locking C for PCBs without front panel; for accessory type guide rails | PCB handle C for board locking; for accessory type guide rails | Identification strips |
|---|---|---|---|---|
| | 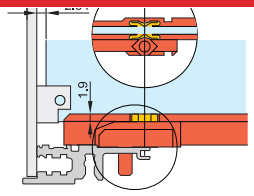 <br>04503050<br>Spring steel, tin-plated, provides conductive contact between board and horizontal rail, on both the solder side and the component side | 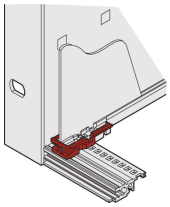 <br>04805050<br>PBT, UL 94 V-0, red, to fix the PCB in the subrack (also slot 1), can also be used without board handle, minimum distance 3 HP | 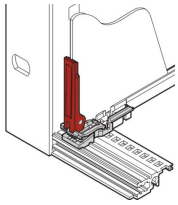 <br>04805051<br>PBT, UL 94 V-0, red, insertion/extraction function with connection to board locking (also slot 1), mounting directly behind front panel (above and below), minimum distance 3 HP | 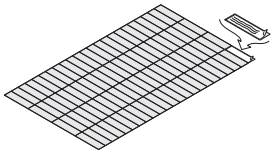 <br>06108076<br>Polyester film, 31 x 4 mm, self-adhesive, white/matt (1 A4 sheet contains 438 pieces) |
| Assembly Colour<br>mm | silver<br>PU 50 pieces | red<br>PU 10 pieces | red<br>PU 10 pieces | white/matt<br>1 piece |
| above/below | **24560-255** | **24560-377** | **24560-378** | **60817-228** |

# RatiopacPRO Platform Accessories

## GUIDE RAILS FOR COMPACTPCI, VME64X WITH CODING, 4.4" PCBS, GROOVE WIDTH 2 MM AND 2.5 MM

### ORDER INFORMATION

| | | | For CompactPCI, VME64x with coding<br>In accordance with IEEE 1101.10 and IEC 60297-3-103 | | Offset 0.1" for power supply units in accordance with IEEE 1101.10 and IEC 60297-3-103 | For 4.4" PCBs |
|---|---|---|---|---|---|---|
| **Assembly**<br>- can be clipped into Al extruded horizontal rails<br>- can be clipped into 1.5 mm thick plates<br><br>**Storage temperature**<br>from -40 °C ... 130 °C | | | 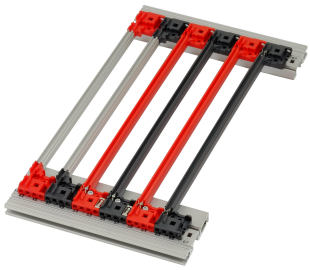 <br>One-piece for groove width 2 mm, PC, UL 94 V-0; multi-piece at groove width 2,5 mm, end-piece PC, UL 94 V-0,center piece Al profile | | 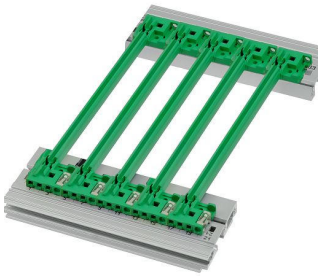 <br>PC, UL 94 V-0,<br>for installation of power supplies in CompactPCI systems or<br>plug-in units with SMD placement | 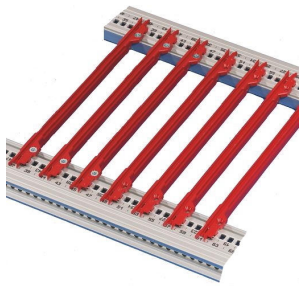 <br>One-piece, PBT, UL 94 V-0;<br>for 4.4" PCBs or drive units |
| Board lengths<br>mm | Groove width<br>mm | Colour<br>mm | PU 10 pieces[2] | 1 piece (SPQ 50)[1] | PU 10 pieces[2] | PU 10 pieces |
| 70 | 2 | red | **24568-357** | | – | – |
| 70 | 2 | grey | **24568-360** | | – | – |
| 160 | 2 | red | **24568-356** | | – | **24560-361** |
| 160 | 2 | grey | **24568-358** | | – | – |
| 160 | 2 | green | – | | **24568-359** | – |
| 220 | 2 | red | – | | – | **24560-362** |
| 220 | 2 | grey | – | | – | – |
| 220 | 2 | green | – | | – | – |
| 160 | 2.5 | red | | **64568-109** | – | – |
| 160 | 2.5 | grey | | **64568-110** | – | – |
| 220 | 2.5 | red | | **64568-111** | – | – |
| 220 | 2.5 | grey | | **64568-112** | – | – |
| 280 | 2.5 | red | **24568-331** | | – | – |
| 280 | 2.5 | grey | **24568-341** | | – | – |
| 340 | 2.5 | red | **24568-332** | | – | – |
| 340 | 2.5 | grey | **24568-342** | | – | – |

### Accessories

| | | | |
|---|---|---|---|
| ESD clip, PU 50 pieces | **24560-255** | – | – |
| ESD clips, for alignment pin, PU 50 pieces | **24560-256** | **24560-256** | – |
| Retention screw, PU 100 pieces | **24560-141** | **24560-141** | **24560-158** |
| Coding peg, PU 100 pieces | **20817-501** | **20817-501** | – |

1) SPQ (standard pack quantity): Order number includes 1 piece, but delivery is exclusively made in standard pack quantity (SPQ); please order at least the SPQ quantity or a multiple thereof
2) Part no. includes one packing unit (PU); delivery is exclusively made in PU

**Description of accessories see from page 6.43 in the EuropacPRO catalog**

# RatiopacPRO Platform Accessories

## GUIDE RAILS, MULTI-PIECE, GROOVE WIDTH 2 and 2.5 MM

### ORDER INFORMATION

| | | | Coding (IEEE) type | | | | | |
|---|---|---|---|---|---|---|---|---|
| | | | red | | grey | | green, 0,1" Offset | |
| **PCBs:**<br>Fixed lengths for 160, 220, 280, 340 mm;<br>length 1000 mm for special dimensions<br>**Mounting:** pluggable into horizontal rails<br><br>**Storage temperature** :<br>End piece -40°C ...+130°C<br>PVC profile 0°C ... +60°C<br><br>red = similar RAL 3000,<br>grey = similar RAL 7016,<br>green = similar RAL 6024 | | | 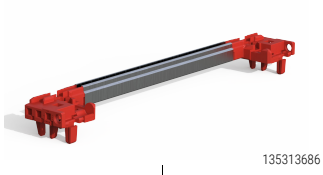 <br>135313686 | | 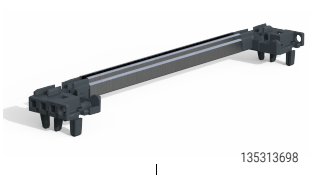 <br>135313698 | | 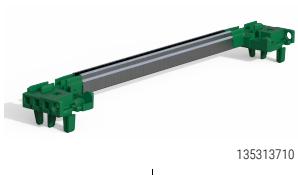 <br>135313710 | |
| | | | end piece, PC, UL 94 V-0,middle sectionAl extrusion | end piece, PBT, UL 94 V-0, middle section plastic extrusion (PVC, RAL 7035) | end piece, PC, UL 94 V-0,middle sectionAl extrusion | end piece, PBT, UL 94 V-0, middle section plastic extrusion (PVC, RAL 7035) | end piece, PC, UL 94 V-0,middle sectionAl extrusion | end piece, PBT, UL 94 V-0, middle section plastic extrusion (PVC, RAL 7035) |
| | mm | Groove width mm | 1 piece (SPQ 10)[1] | 1 piece (SPQ 10)[1] | 1 piece (SPQ 10)[1] | 1 piece (SPQ 10)[1] | 1 piece (SPQ 10)[1] | 1 piece (SPQ 10)[1] |
| End piece, 1 pair | | 2 | **64568-093** | **64568-093** | **64568-094** | **64568-094** | **64568-095** | **64568-095** |
| Al extrusion, for 160 mm board length | 95 | 2 | **34560-891** | **34564-891** | **34560-891** | **34564-891** | **34560-891** | **34564-891** |
| Al extrusion, for 220 mm board length | 155 | 2 | **34560-892** | **34564-892** | **34560-892** | **34564-892** | **34560-892** | **34564-892** |
| Al extrusion, for 280 mm board length | 215 | 2 | **34560-893** | **34564-893** | **34560-893** | **34564-893** | **34560-893** | **34564-893** |
| Al extrusion, for 340 mm board length | 275 | 2 | **34560-894** | – | **34560-894** | – | **34560-894** | – |
| | | | | | | | | |
| Al extrusion,for any board length | 1000 | 2 | **34560-900** | **34564-900** | **34560-900** | **34564-900** | **34560-900** | **34564-900** |
| Description | Length mm | Groove width mm | 1 piece (SPQ 10)[1] | 1 piece (SPQ 10)[1] | 1 piece (SPQ 10)[1] | 1 piece (SPQ 10)[1] | 1 piece (SPQ 10)[1] | 1 piece (SPQ 10)[1] |
| End piece, 1 pair | | 2.5 | **64568-093** | | **64568-094** | | **64568-095** | |
| Al extrusion, for 160 mm board length | 95 | 2.5 | **34562-813** | – | **34562-813** | – | **34562-813** | – |
| Al extrusion, for 220 mm board length | 155 | 2.5 | **34562-814** | – | **34562-814** | – | **34562-814** | – |
| Al extrusion, for 280 mm board length | 215 | 2.5 | **34562-815** | – | **34562-815** | – | **34562-815** | – |
| Al extrusion, for 340 mm board length | 275 | 2.5 | **34562-816** | – | **34562-816** | – | **34562-816** | – |
| | | | | | | | | |
| Al extrusion,for any board length | 1000 | 2.5 | **34562-822** | – | **34562-822** | – | **34562-822** | – |

### Accessories

| | | | | | | |
|---|---|---|---|---|---|---|
| ESD clip, PU 50 pieces | **24560-255** | **24560-255** | **24560-255** | **24560-255** | **24560-255** | **24560-255** |
| ESD clips, for alignment pin, PU 50 pieces | **24560-256** | **24560-256** | **24560-256** | **24560-256** | **24560-256** | **24560-256** |
| Retention screw, PU 100 pieces; torque max. 0.2 Nm | **24560-141** | **24560-141** | **24560-141** | **24560-141** | **24560-141** | **24560-141** |
| Coding peg | **20817-501** | **20817-501** | **20817-501** | **20817-501** | **20817-501** | **20817-501** |

1) SPQ (standard pack quantity): Part number includes 1 piece, but delivery is exclusively made in standard pack quantity (SPQ) please order at least the SPQ quantity or a multiple

2) Part no. includes one packing unit (PU); delivery is exclusively made in PU

### NOTE

- End pieces with coding can be used for groove width 2.0mm as well as for 2.5mm

# RatiopacPRO Platform Accessories

## GUIDE RAILS FOR COMPACTPCI, VME64X WITH CODING, PREASSEMBLED ESD CLIPS, GROOVE WIDTH 2 MM

### ORDER INFORMATION

| | | | | Type **with Coding**, forCompactPCI, VME64x application. In accordance with IEEE 1101.10 and IEC 60297-3-103<br>ESD CLIPS preassembled | | |
|---|---|---|---|---|---|---|
| | | | | red colour | grey colour | |
| **Assembly**<br>- can be clipped into Al extruded horizontal rails<br>- can be clipped into1.5 mm thick plates<br><br>**Storage temperature**<br>from -40 °C ... 130 °C<br><br>**Colors of Plastic Material**<br>red: RAL 3000<br>grey: RAL 7016<br><br>**Remark:**<br>At least one guide rail with ESD clips is required per slot, to avoid electrostatic discharges | 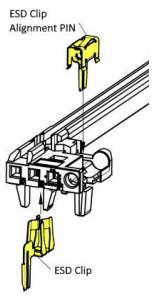 | | | One-piece for groove width 2 mm, PC, UL 94 V-0;<br><br>ESD Clip and ESD Clip for Alignment PIN preassembled<br><br> 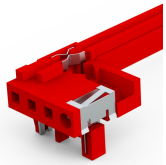 <br>Picture shows 160mm long guide rail, mounting position bottom | One-piece for groove width 2 mm, PC, UL 94 V-0;<br><br>ESD Clip and ESD Clip for Alignment PIN preassembled<br><br> 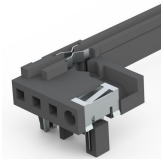 <br>Picture shows 160mm long guide rail, mounting position bottom | |
| Board length<br>mm | Groove width<br>mm | Colour<br>mm | Mounting Position | PU 10 pieces | PU 10 pieces | |
| 70 | 2 | red | bottom | **24568-855** | | |
| 70 | 2 | red | top | **24568-853** | | |
| 160 | 2 | red | bottom | **24568-847** | | |
| 160 | 2 | red | top | **24568-850** | | |
| 70 | 2 | grey | bottom | | **24568-856** | |
| 70 | 2 | grey | top | | **24568-854** | |
| 160 | 2 | grey | bottom | | **24568-848** | |
| 160 | 2 | grey | top | | **24568-851** | |

### Accessories

| | | | |
|---|---|---|---|
| Retention screw, PU 100 pieces; torque max. 0.2 Nm | **24560-141** | **24560-141** | |
| Coding peg, PU 100 pieces | **20817-501** | **20817-501** | |

2) Part no. includes one packing unit (PU); delivery is exclusively made in PU

**Description of accessories see from page 6.43 in the EuropacPRO catalog**

# RatiopacPRO Platform Service Plus

## Configurator

Our online chassis configurator supports countless different configuration options.

To configure a chassis, users can:

- Select the basics of the chassis, such as height, width, depth, EMC, and air cooling.
- Choose the design style of the chassis, including the color of the top/bottom/side covers, side frame, rubber strip, and graphics.
- Design the frame of the chassis, including the front frame design and rear frame design.
- Choose the board mechanics of the chassis, such as front panels, mounting front, rear panels, and mounting rear.

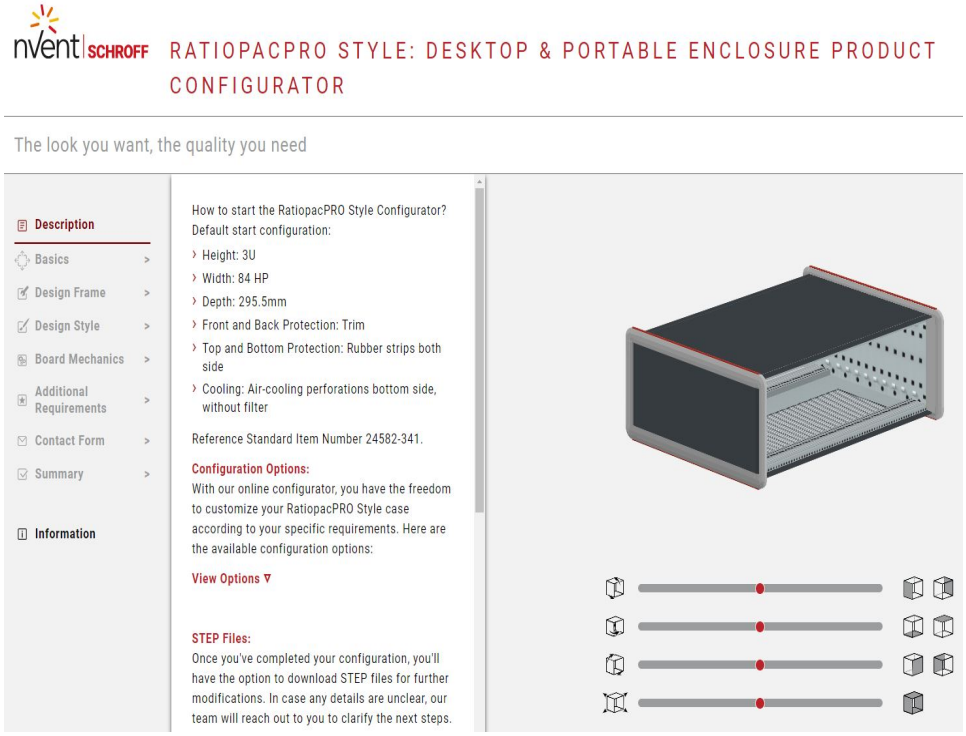


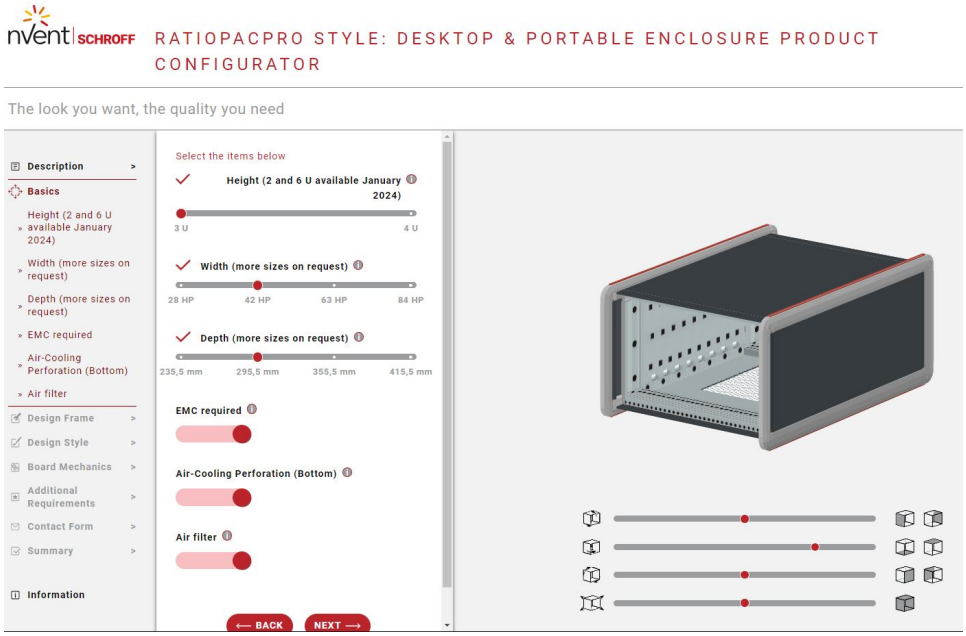


Link to the configurator: https://configurators.schroff.biz/ratiopacpro-style

# RatiopacPRO Platform Service Plus

**MODIFICATION**

APPLICATION EXAMPLES

RatiopacPRO Style with card cage for 19" boards

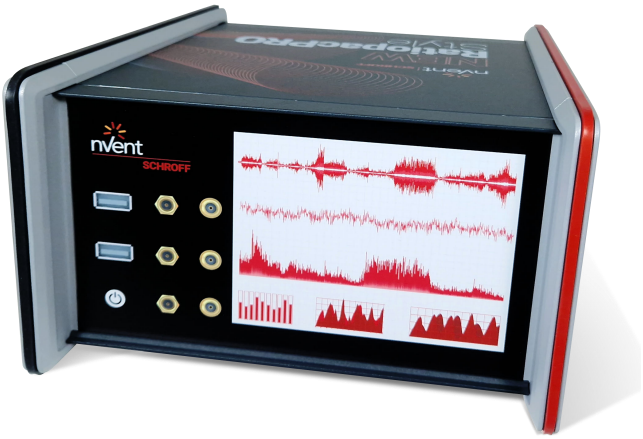


RatiopacPRO Style full-width screwless front panel and mounting plate

Easy stackable by removing rubber stips from lower chassis

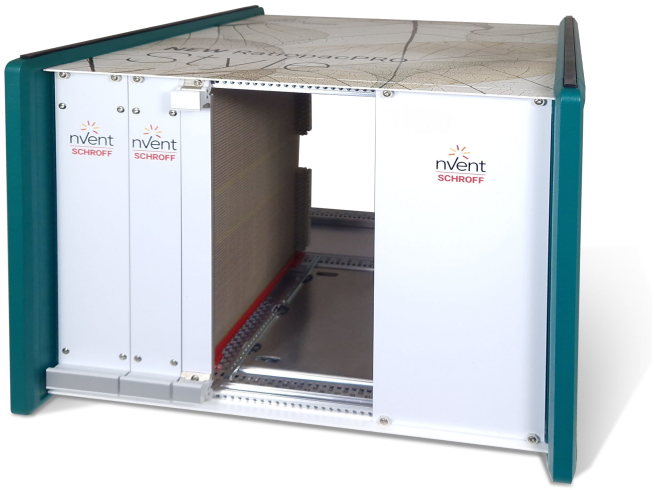


Custom print and design available on request

# Desk-top cases – Introduction

## CASE TYPES: DESK-TOP ENCLOSURE/19" CASE

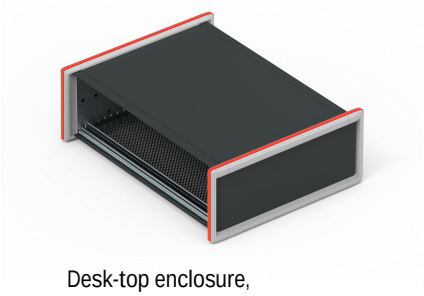

Desk-top enclosure, RatiopacPRO Style

19" case, comptec

### Desk-top enclosures

Our desk-top cases are used to house PCBs (euroboards) or individual components

The choice is yours:

- RatiopacPRO Style or RatiopacPRO / Pro Air, the universal case with 19" compatible dimensions and high EMC shielding, e.g. for CompactPCI and VME64x applications
- PropacPRO, the robust case with high EMC shielding for 19"-compatible or custom electronics assemblies
- CompacPRO, Desk-top or portable case for unshielded applications

### 19" cases

Our comptec cases are comparable with small cabinets and are used to house 19" components such as subracks, 19" fan trays or 19" front panels

All desk-top enclosures have a very low weight owing to the materials used and are also suitable for mobile use

## APPLICATIONS FOR DESK-TOP ENCLOSURES

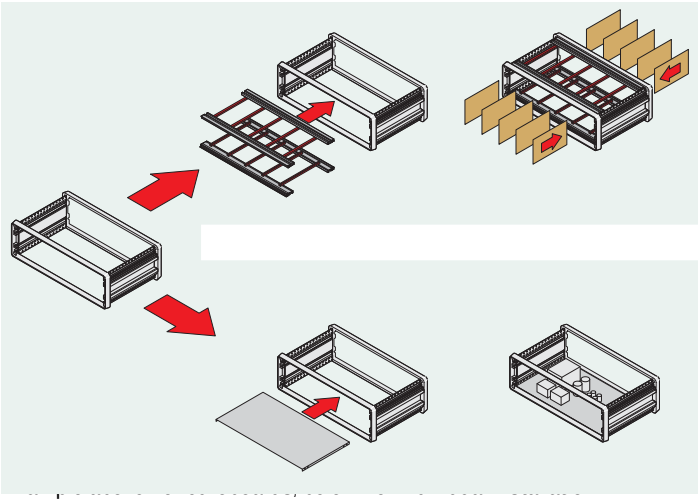

**The most important user domains for desk-top enclosures are:**

- Fitting with euroboards in accordance with IEC 60297

- Fitting with individual electrical or mechanical components, e.g.on mounting plates

## ONE PRODUCT PLATFORM AND EXTENSIVE ACCESSORIES

- Practical technology without time-consuming assembly. The modular product platform of these cases allows a wide range of possible uses with only a small number of components.

  The intelligent design of all components results in an astonishingly quick and easy assembly of the components.

  With our PRO product platform we offer you full compatibility of all individual components and accessories, also with our europacPRO subracks.

  Standard desk-top enclosures can also be adapted easily and with little effort for mobile applications.

# Desk-top cases – Introduction

## FORMS OF DELIVERY FOR DESK-TOP ENCLOSURES

Flat pack delivery to save space

Supplied in space-saving packs. Simply unpack parts and screw together - done.

Depending on the kit chosen the threaded insert, the perforated rail or the EMC gasket is pre-assembled on the horizontal rail.

We offer you three forms of delivery:

- Pre-assembled empty case kit for individual configuration, frame assembled, cladding parts supplied loose.
- Ready assembled cases to your specifications. With our ServicePLUS option you can order ready-assembled cases, with drilled holes and cutouts and individual front panels
  - if necessary even by express service -.

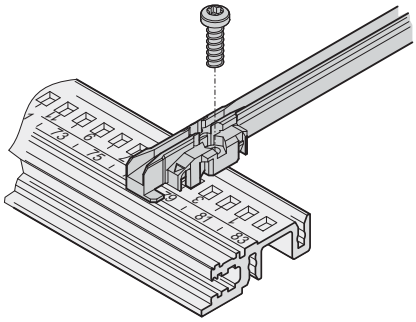

06108084

- Guide rails form the interface between the mechanics of the case and the electronics assembled (PCBs, plug-in units, frame type plug-in units, drive unit modules, etc.).

  Robust snap-in fixings on the plastic rails assure that the components are held securely, even when exposed to vibrations.

  Guide rails can also be screwed on.

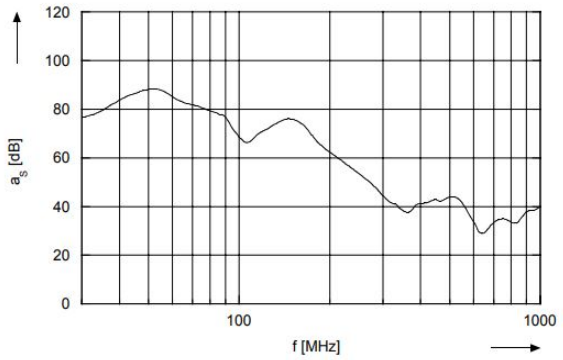


Shielding

- Our case product platforms offer standard solutions for achieving electromagnetic compatibility (EMC) and to avoid electrostatic interference (ESD)
- Shielding on the front and rear of the case is effected by front panels with EMC gaskets
- To prevent electrostatic discharge when inserting PCBs, ESD contacts are clipped into the guide rails. These provide a conductive connection between board and case earth/ground
- Test reports are available on our website for download

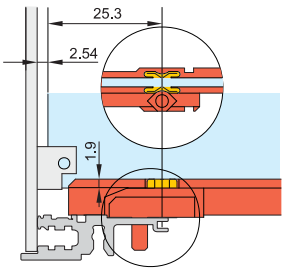


04503050

Position of the ESD clip

## North America

**Warwick, RI, USA**
Tel +1.401.738.1722
**San Diego, CA, USA**
Tel +1.858.740.2400

## Europe, Middle East & India

**Straubenhardt, Germany**
Tel +49 7082 794 0
**Betschdorf, France**
Tel +33 3 88 90 64 90
**Warsaw, Poland**
Tel +48 22 209 98 35
**Hemel Hempstead, Great Britain**
Tel +44 1442 24 04 71
**Lainate, Italy**
Tel +39 02 932 714 1
**Dubai, United Arab Emirates**
Tel +971 4 82 38 666
**Bangalore, India**
Tel +91 80 6715 8900
**Istanbul, Turkey**
Tel +90 541 368 0941

## Asia Pacific

**Shanghai, China**
Tel +86 21 2412 6943
**Singapore**
Tel +65 6768 5800
**Shin-Yokohama, Japan**
Tel +81 45 476 0271


Our powerful portfolio of brands:

**CADDY ERICO HOFFMAN RAYCHEM SCHROFF TRACER**

nVent

nVent.com/SCHROFF

©2018 nVent. All nVent marks and logos are owned or licensed by nVent Services GmbH or its affiliates. All other trademarks are the property of their respective owners.
nVent reserves the right to change specifications without notice.